INSTALLATION MANUAL

MITSUBISHI HEAVY INDUSTRIES

Air to Water Heat Pump using R32 refrigerant

Hydrolution (HM)

HSB60-W/FDCW60VNX-W

PT300/RC-HY20-W/RC-HY40-W

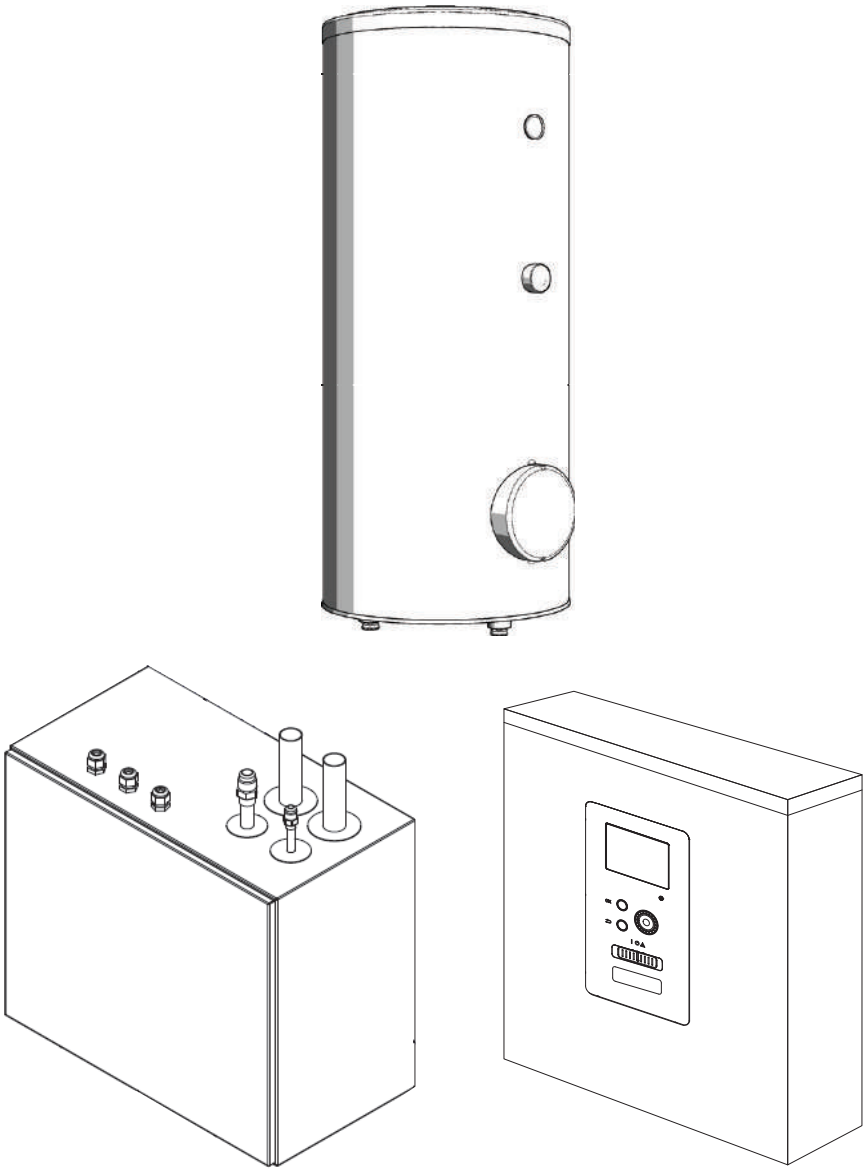

CE EAC

This heat pump complies with EMC Directive 2004/108/EC (replaced by 2014/30/EU on 20/4/2016), LV Directive 2006/95/EC (replaced by 2014/35/EU on 20/4/2016).
CE marking is applicable to the area of 50 Hz power supply.

English：Original instruction

PSC012D135A

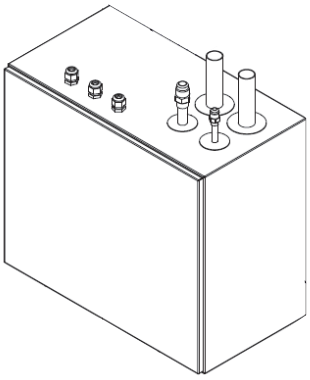

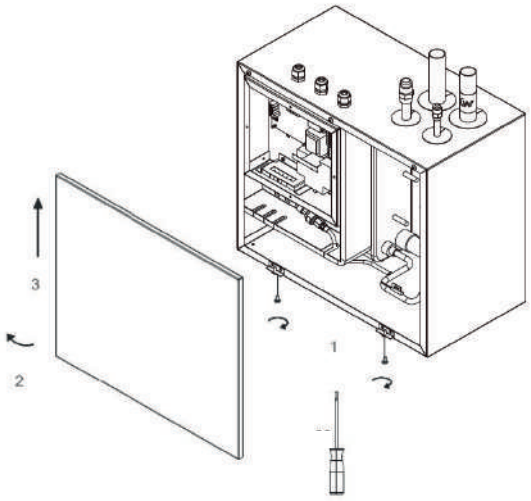
3
2
1

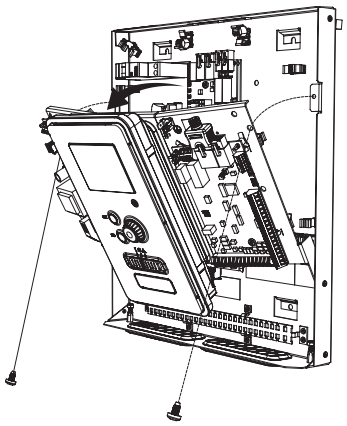

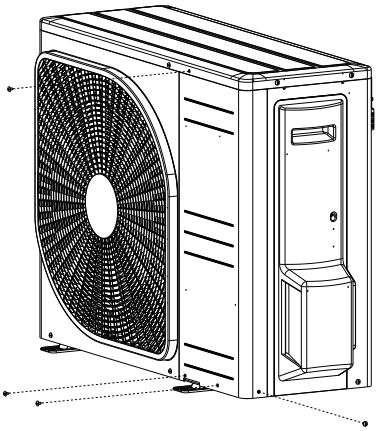

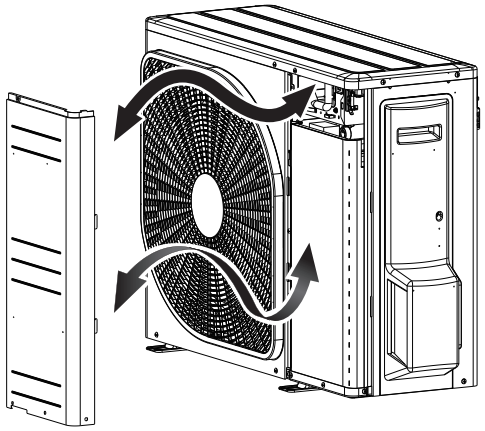

Table of Contents

Safety precautions 2

General information for installer 7
Over view and design 7
Transport and storage 9
Supplied components 9
Assembly 9
Hanging indoor unit 11
Hanging control unit 11
Dimensioning expansion vessel 12
Recommended installation order 12

Pipe installation 13
General 13
Installation diagram 13
HSB60-W 13
System requirements 14
Overflow valve 14
Pump capacity diagram 14
Pressure drop in indoor unit 14
Dimensions and pipe connections 15
HSB60-W 15
PT300 15
Water circuit 16
Connection to heating system 16
Connection to hot water heater 16
Housing disassembly of tank unit 16
Connecting hot water tank to indoor unit 17
Connecting hot water tank to water main 18
Hot water circulation circuit 19
Connection of external heat source 19
Refrigerant circuit 19
Connecting refrigerant pipes 19
Piping insulation 19
Dockings 20

Electrical installation 24
General 24
Electrical components 25
Accessibility, electrical connection for controller 26
Cable lock 28
Connection for HSB60-W 28
Power supply 28
Connection between indoor and outdoor unit 28
Cascade connection setting 29
Recommended fuse size for HSB series 29
Recommended cable size for HSB60-W 29
RC-HY20/40-W 29
Power source 29
RC-HY20-W 30
Connection between controller and indoor unit 30
Connection between controller and circulation pump (GP12) 30
Connection between controller and 3 way valve (QN10/QN12) 30
Connection between controller and sensors 31
Optional connections 32
◦ Room sensor BT50 32
◦ Step controlled additional heat 33
◦ Relay output for emergency mode 33
◦ External circulation pump 34
◦ AUX inputs 34
◦ AUX outputs 35
◦ myUpway™ 35
RC-HY40-W 36
Connection between controller and indoor unit 36
Connection between controller and circulation pump (GP12) 36
Connection between controller and 3 way valve (QN10/QN12) 36
Connection between controller and sensors 37
Optional connections 38
◦ Load monitor 38
◦ Room sensor BT50 38
◦ Step controlled additional heat 38
◦ Relay output for emergency mode 38
◦ External circulation pump 38
◦ AUX inputs 39
◦ AUX outputs 39
◦ myUpway™ 39

Commissioning and adjusting 40
Preparations 40
Filling and venting 40
Hot water tank 40
Climate system 40
Inspection of installation 40
Start-up and inspection 41
Before start-up 41
Commissioning with heat pump 41
Commissioning with additional heater only 41
3-way valve operation check 41
AUX function check 41
Cooling mode 41
Cleaning particle filter 41
Secondary adjustment 41
Start guide 42
Start guide - RC-HY20-W 43
Start guide - RC-HY40-W 46
Heating/cooling curve setting 50
Hot water circulation setting 51
SG ready 52

Control 53
Display unit 53
Menu system 54
Menu list 57
Menu 1 – Indoor climate 57
Menu 2 – Hot water 57
Menu 3 – Info 57
Menu 4 – My system 57
Menu 5 – Service 58
Sub-menus (Menu 5 - Service) 60

Service 67

Disturbances in comfort 71
Manage alarm 71
Troubleshooting 71
Additional heating only 73
Alarm list 74

Accessories 77

Technical data 80
Electrical circuit diagram 80
HSB60-W 80
RC-HY20-W 81
RC-HY40-W 85

Safety precautions

When installing the unit, be sure to check whether the selection of installation place, power supply specifications, usage limitation (piping length, height differences between indoor and outdoor units, power supply voltage and etc.) and installation spaces.

- **We recommend you to read this "SAFETY PRECAUTIONS" carefully before installation in order to gain full advantage of the functions of the unit and to avoid malfunction due to mishandling.**
- **The precautions described below are divided into ⚠WARNING and ⚠CAUTION. The matters with possibilities leading to serious consequences such as death or serious personal injury due to erroneous handling are listed in the ⚠WARNING and the matters with possibilities leading to personal injury or damage of the unit due to erroneous handling including probability leading to serious consequences in some cases are listed in ⚠CAUTION. These are very important precautions for safety. Be sure to observe all of them without fail.**
- **Be sure to confirm no anomaly on the equipment by commissioning after completed installation and explain the operating methods as well as the maintenance methods of this equipment to the user according to the owner's manual.**
- **Keep the installation manual together with owner's manual at a place where any user can read at any time. Moreover if necessary, ask to hand them to a new user.**

This heat pump complies with EMC Directive 2014/30/EU.
This appliance is designed for use in a home environment and can be used by children aged from 8 years and above and persons with reduced physical, sensory or mental capabilities or lack of experience and knowledge if they have been given supervision or instruction concerning use of the appliance in a safe way and understand the hazards involved. Children shall not play with the appliance. Cleaning and user maintenance shall not be made by children without supervision.
This in accordance to applicable parts of the low voltage directive 2014/35/EU, LVD.
This appliance is also intended for use by experts or trained users in shops, hotels, light industry, on farms and in similar environments. This in accordance to applicable parts of the machinery directive 2006/42/EC.
CE marking is applicable to the area of 50 Hz power supply.
The emission sound pressure level from each Indoor and Outdoor unit is under 70 dB(A).

⚠ WARNING

Installation must be carried out by the qualified installer.
If you install the system by yourself, it may cause serious trouble such as water leaks, electric shocks, fire and personal injury, as a result of a system malfunction.

Install the system in full accordance with the instruction manual.
Incorrect installation may cause bursts, personal injury, water leaks, electric shocks and fire.

Use the original accessories and the specified components for installation.
If parts other than those prescribed by us are used, It may cause water leaks, electric shocks, fire and personal injury.

When installing in small rooms, take prevention measures not to exceed the density limit of refrigerant in the event of leakage.
Consult the expert about prevention measures. If the density of refrigerant exceeds the limit in the event of leakage, lack of oxygen can occur, which can cause serious accidents.

Ventilate the working area well in the event of refrigerant leakage during installation.
If the refrigerant comes into contact with naked flames, poisonous gas is produced.

After completed installation, check that no refrigerant leaks from the system.
If refrigerant leaks into the room and comes into contact with an oven or other hot surface, poisonous gas is produced.

Hang up the unit at the specified points with ropes which can support the weight in lifting for portage. And to avoid jolting out of alignment, be sure to hang up the unit at 4-point support.
An improper manner of portage such as 3-point support can cause death or serious personal injury due to falling of the unit.

Install the unit in a location with good support.
Unsuitable installation locations can cause the unit to fall and cause material damage and personal injury.

Ensure the unit is stable when installed, so that it can withstand earthquakes and strong winds.
Unsuitable installation locations can cause the unit to fall and cause material damage and personal injury.

Ensure that no air enters in the refrigerant circuit when the unit is installed and removed.
If air enters in the refrigerant circuit, the pressure in the refrigerant circuit becomes too high, which can cause burst and personal injury.

The electrical installation must be carried out by the qualified electrician in accordance with "the norm for electrical work" and "national wiring regulation", and the system must be connected to the dedicated circuit.
Power supply with insufficient capacity and incorrect function done by improper work can cause electric shocks and fire.

Be sure to shut off the power before starting electrical work.
Failure to shut off the power can cause electric shocks, unit failure or incorrect function of equipment.

Be sure to use the cables conformed to safety standard and cable ampacity for power distribution work.
Unconformable cables can cause electric leak, anomalous heat production or fire.

Use the prescribed cables for electrical connection, tighten the cables securely in terminal block and relieve the cables correctly to prevent overloading the terminal blocks.
Loose connections or cable mountings can cause anomalous heat production or fire.

Arrange the wiring in the control box so that it cannot be pushed up further into the box. Install the service panel correctly.
Incorrect installation may result in overheating and fire.

Do not perform brazing work in the airtight room.
It can cause lack of oxygen.

Use the prescribed pipes, flare nuts and tools for R32 or R410A.
Using existing parts (for R22 or R407C) can cause the unit failure and serious accidents due to burst of the refrigerant circuit.

Tighten the flare nut by using double spanners and torque wrench according to prescribed method. Be sure not to tighten the flare nut too much.
Loose flare connection or damage on the flare part by tightening with excess torque can cause burst or refrigerant leaks which may result in lack of oxygen.

Do not open the service valves for liquid line and gas line until completed refrigerant piping work, air tightness test and evacuation.
If the compressor is operated in state of opening service valves before completed connection of refrigerant piping work, air can be sucked into refrigerant circuit, which can cause bust or personal injury due to anomalously high pressure in the refrigerant.

Do not put the drainage pipe directly into drainage channels where poisonous gases such as sulphide gas can occur.
Poisonous gases will flow into the room through drainage pipe and seriously affect the user's health and safety.

Only use prescribed optional parts. The installation must be carried out by the qualified installer.
If you install the system by yourself, it can cause serious trouble such as water leaks, electric shocks, fire.

Do not run the unit with removed panels or protections
Touching rotating equipments, hot surfaces or high voltage parts can cause personal injury due to entrapment, burn or electric shocks.

Be sure to fix up the service panels.
Incorrect fixing can cause electric shocks or fire due to intrusion of dust or water.

Do not perform any repairs or modifications by yourself. Consult the dealer if the unit requires repair.
If you repair or modify the unit, it can cause water

leaks, electric shocks or fire.

Do not perform any change of protective device itself or its setup condition

The forced operation by short-circuiting protective device of pressure switch and temperature controller or the use of non specified component can cause fire or burst.

Be sure to switch off the power supply in the event of installation, inspection or servicing.

If the power supply is not shut off, there is a risk of electric shocks, unit failure or personal injury due to the unexpected start of fan.

Consult the dealer or an expert regarding removal of the unit.

Incorrect installation can cause water leaks, electric shocks or fire.

Stop the compressor before disconnecting refrigerant pipes in case of pump down operation.

If disconnecting refrigerant pipes in state of opening service valves before compressor stopping, air can be sucked, which can cause burst or personal injury due to anomalously high pressure in the refrigerant circuit.

⚠ CAUTION

Carry out the electrical work for ground lead with care.

Do not connect the ground lead to the gas line, water line, lightning conductor or telephone line's ground lead. Incorrect grounding can cause unit faults such as electric shocks due to short-circuiting.

Use the circuit breaker with sufficient breaking capacity.

If the breaker does not have sufficient breaking capacity, it can cause the unit malfunction and fire.

Earth leakage breaker must be installed.

If the earth leakage breaker is not installed, it can cause electric shocks.

Do not use any materials other than a fuse with the correct rating in the location where fuses are to be used.

Connecting the circuit with copper wire or other metal thread can cause unit failure and fire.

Do not install the unit near the location where leakage of combustible gases can occur.

If leaked gases accumulate around the unit, it can cause fire.

Do not install the unit where corrosive gas (such as sulfurous acid gas etc.) or combustible gas (such as thinner and petroleum gases) can accumulate or collect, or where volatile combustible substances are handled.

Corrosive gas can cause corrosion of heat exchanger, breakage of plastic parts and etc. And combustible gas can cause fire.

Secure a space for installation, inspection and maintenance specified in the manual.

Insufficient space can result in accident such as personal injury due to falling from the installation place.

When the outdoor unit is installed on a roof or a high place, provide permanent ladders and handrails along the access route and fences and handrails around the outdoor unit.

If safety facilities are not provided, it can cause personal injury due to falling from the installation place.

Do not use the indoor unit at the place where water splashes may occur.

Since the indoor unit is not waterproof, it can cause electric shocks and fire.

Check that there is no water leakage from the water circuit before starting commissioning.

If there is water leakage you may get scalded by hot water. There is also a risk that the indoor unit or electric equipment will be damaged by the water.

Do not install or use the system close to the equipment that generates electromagnetic fields or high frequency harmonics.

Equipment such as inverters, standby generators, medical high frequency equipments and telecommunication equipments can affect the system, and cause malfunctions and breakdowns. The system can also affect medical equipment and telecommunication equipment, and obstruct its function or cause jamming.

Do not install the outdoor unit in a location where insects and small animals can inhabit.

Insects and small animals can enter the electric parts and cause damage or fire. Instruct the user to keep the surroundings clean.

Do not use the base flame for outdoor unit which is corroded or damaged due to long periods of operation.

Using an old and damage base flame can cause the unit falling down and cause personal injury.

Do not install the unit in the locations listed below.

- Locations where carbon fiber, metal powder or any powder is floating.
- Locations where any substances that can affect the unit such as sulphide gas, chloride gas, acid and alkaline can occur.
- Vehicles and ships.
- Locations where cosmetic or special sprays are often used.
- Locations with direct exposure of oil mist and steam such as kitchen and machine plant.
- Locations where any machines which generate high frequency harmonics are used.
- Locations with salty atmospheres such as coastlines.
- Locations with heavy snow (If installed, be sure to provide base flame and snow hood mentioned in the manual).
- Locations where the unit is exposed to chimney smoke.
- Locations at high altitude (more than 1000m high).
- Locations with ammonic atmospheres.
- Locations where heat radiation from other heat source can affect the unit.
- Locations without good air circulation.
- Locations with any obstacles which can prevent inlet and outlet air of the unit.
- Locations where short circuit of air can occur (in case of multiple units installation).
- Locations where strong air blows against the air outlet of outdoor unit.

It can cause remarkable decrease in performance, corrosion and damage of components, malfunction and fire.

Do not install the outdoor unit in the locations listed below.

- Locations where discharged hot air or operating sound of the outdoor unit can bother neighborhood.
- Locations where outlet air of the outdoor unit blows directly to plants.
- Locations where vibration can be amplified and transmitted due to insufficient strength of structure.
- Locations where vibration and operation sound generated by the outdoor unit can affect seriously. (on the wall or at the place near bed room)
- Locations where an equipment affected by high harmonics is placed. (TV set or radio receiver is placed within 5m)
- Locations where drainage cannot run off safely.

It can affect surrounding environment and cause a claim.

Do not install the remote controller at the direct sunlight.

It can cause malfunction or deformation of the remote controller.

Do not use the unit for special purposes such as storing foods, cooling precision instruments and preservation of animals, plants or art.

It can cause the damage of the items.

Take care when carrying the unit by hand.

Avoid dropping the unit during transportation. If the unit weights more than 20kg, it must be carried by two or more persons. Do not carry by the plastic straps, always use the carry handle when carrying the unit by hand. Use gloves to minimize the risk of cuts by the aluminum fins.

Dispose of any packing materials cor-rectly.

Any remaining packing materials can cause personal injury as it contains nails and wood. And to avoid danger of suffocation, be sure to keep the plastic wrapper away from children and to dispose after tear it up.

Pay attention not to damage the drain pan by weld spatter when welding work is done near the indoor unit.

If weld spatter entered into the indoor unit during welding work, it can cause pin-hole in drain pan and result in water leakage. To prevent such damage, keep the indoor unit in its packing or cover it.

Be sure to insulate the refrigerant pipes so as not to condense the ambient air moisture on them.

Insufficient insulation can cause condensation, which can lead to moisture damage on the ceiling, floor, furniture and any other valuables.

Be sure to perform air tightness test by pressurizing with nitrogen gas after completed refrigerant piping work.

If the density of refrigerant exceeds the limit in the event of refrigerant leakage in the small room, lack of oxygen can occur, which can cause serious accidents.

Do not touch any buttons with wet hands.
It can cause electric shocks.

Avoid damage by metal edge or trapped by panels.
Broken wire can cause unit faults such as electric shock due to short circuiting.

Do not shut off the power supply immediately after stopping the operation.
Wait at least 5 minutes, otherwise there is a risk of water leakage or breakdown.

Do not control the system with main power switch.
It can cause fire or water leakage. In addition, the fan can start unexpectedly, which can cause personal injury.

Do not touch any refrigerant pipes when the system is in operation.
During operation the refrigerant pipes become extremely hot or extremely cold depending the operating condition, and it can cause burn injury or frost injury.

Notabilia for units designed for R32

- Do not use any refrigerant other than R32. R32 will rise to pressure about 1.6 times higher than that of a conventional refrigerant (R22 or R407C). A cylinder containing R32 has a light blue indication mark on the top.
- In charging refrigerant, always take it out from a cylinder in the liquid phase.
- All indoor units must be models designed exclusively for R32. Check connectable indoor unit models in a catalog, etc. (A wrong indoor unit, if connected into the system, will impair proper system operation)

Dedicated tools for R32 or R410A	
a)	Gauge manifold
b)	Charge hose
c)	Electronic scale for refrigerant charge
d)	Vacuum pump
e)	Flaring tool set
f)	Protrusion control gauge for copper pipe
g)	Vacuum pump adapter
h)	Gas leak detector

General information for installer

For outdoor unit installation information, see Installation manual for Outdoor unit.

Over view and design

HSB60-W

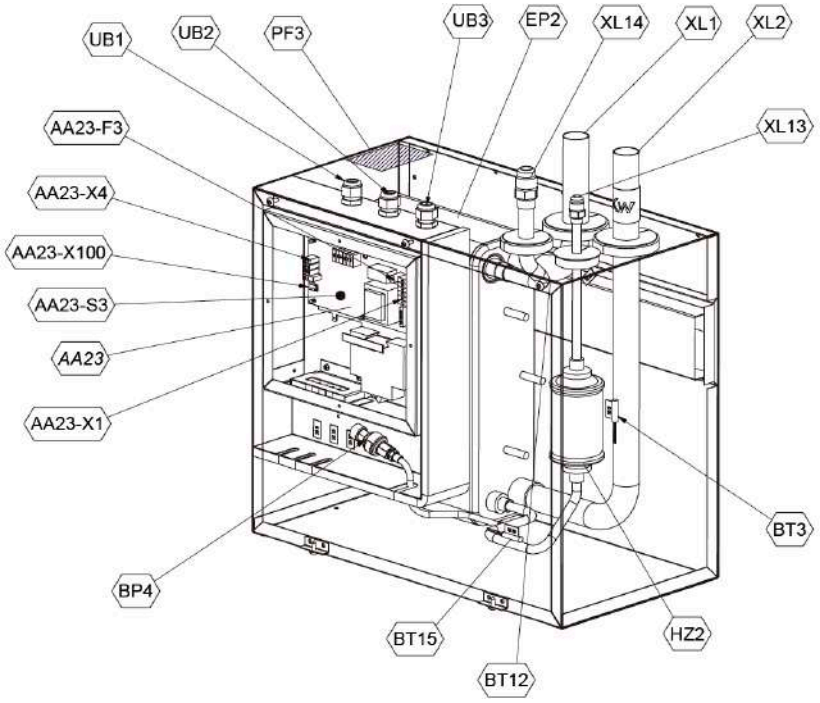

Pipe connections

XL1(Red mark)	Climate system supply
XL2 (Blue mark)	Climate system return
XL14	Connection, gas line
XL13	Connection, liquid line

Valves etc.

EP2	Heat exchanger
HQ1	Particle filter (supplied)
HZ2	Drying filter

Electrical components

AA23	Communication board
AA23-F3	Fuse for external heating cable
AA23-S3	DIP switch, addressing of outdoor unit
AA23-X1	Terminal block, incoming supply, connection of KVR
AA23-X4	Terminal block, communication with indoor module / control module
AA23-X100	Terminal block, communication outdoor module

Sensor, thermostats

BP4	Pressure sensor, high pressure
BT3	Temperature sensor, heating medium, return
BT12	Temperature sensor, condenser, supply
BT15	Temperature sensor, fluid pipe

Miscellaneous

UB1	Cable gland
UB2	Cable gland
UB3	Cable gland

PT300

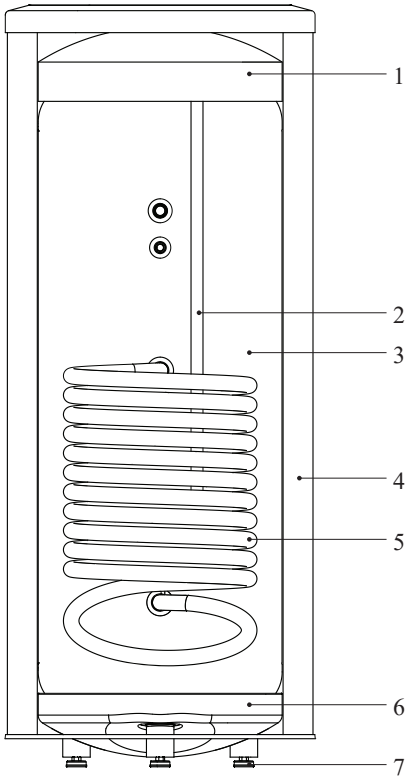

Section of the PT300 storage tanks.

1. Upper insulation of the storage tank
2. Protective magnesium anode
3. Enamelled tank
4. Side insulation of the storage tank
5. Coil
6. Lower insulation of the storage tank
7. Adjustable foot

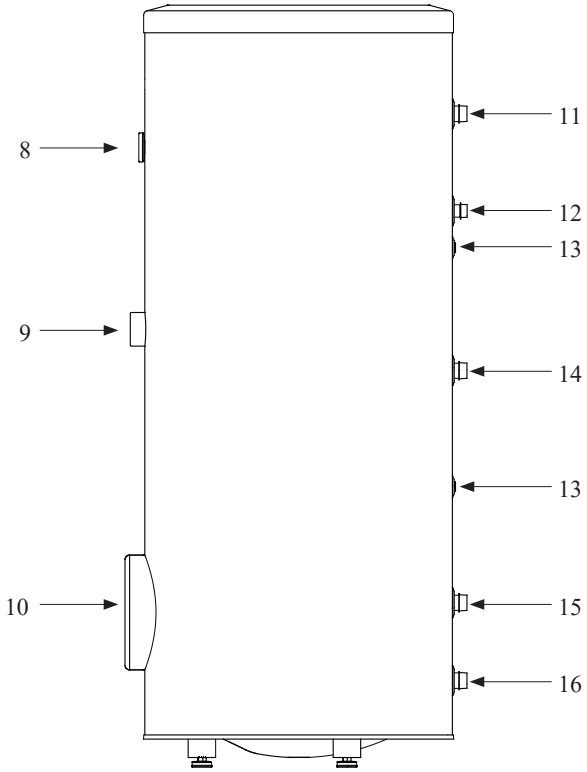

Side view of the PT300 storage tanks.

8. Thermometer
9. Connector pipe for mounting electric heating unit
10. Inspection opening
11. Hot water intake connector pipe
12. Hot water circulation connector pipe
13. Temperature sensor cover
14. Coil supply connector pipe
15. Connection of return line from the coil
16. Cold water supply connector pipe

Transport and storage

Indoor unit and tank unit must be transported and stored vertically in dry conditions.

Supplied components

HSB60-W Indoor unit

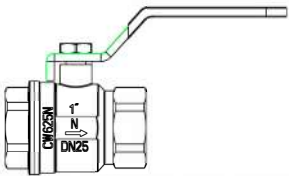

Particle filter R25 (HQ1).

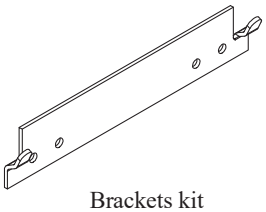

Brackets kit

RC-HY20/40-W Control unit

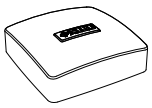

Outside sensor

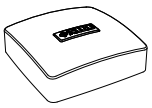

Room sensor (RC-HY40-W only)

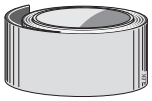

Insulation tape

Temperature sensor

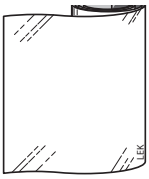

Aluminium tape

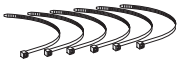

Cable ties

Heating pipe paste

Current sensor (RC-HY40-W only)

Assembly

- It is recommended that indoor unit is installed in a room with existing floor drainage, most suitably in a utility room or boiler room.
- For indoor unit and control unit, the mounting surface must be firm, flat and vertical, preferably a concrete wall.
- Tank unit must be set on a solid waterproof base that would keep the weight of the unit. The height-adjusting legs allow for levelling and stable setting.

PT300

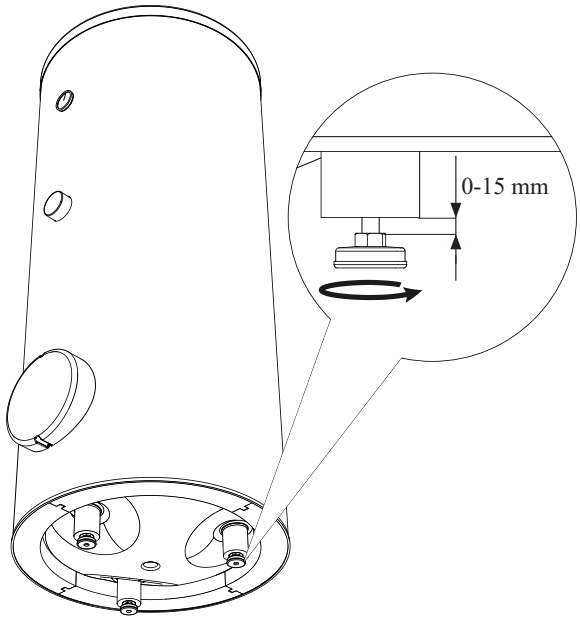

- Install indoor unit with its back to an outside wall, ideally in a room where noise does not matter. If this is not possible, avoid placing it against a wall behind a bedroom or other room where noise may be a problem.
- Route pipes so they are not fixed to an internal wall that backs on to a bedroom or living room.
- Install tank unit and its pipings to indoor unit indoors in order to avoid icing.
- Ensure free space described in the following figures for future maintenance.

HSB60-W

Recommendation for positioning on wall

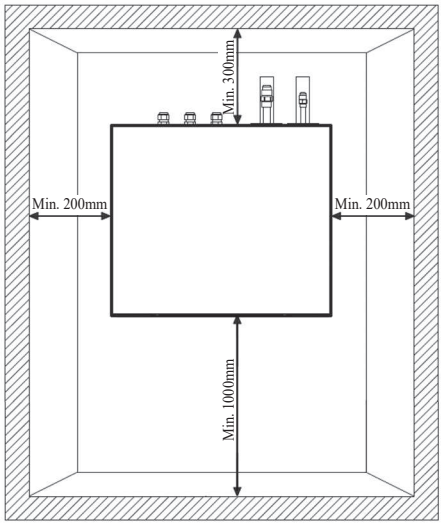

Recommendation for positioning in corner

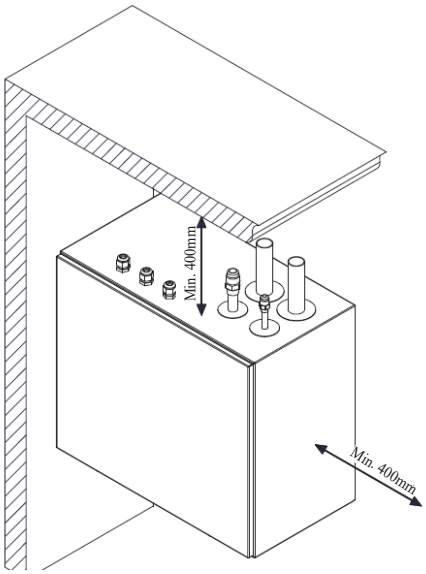

*Min 800mm is required in front

PT300

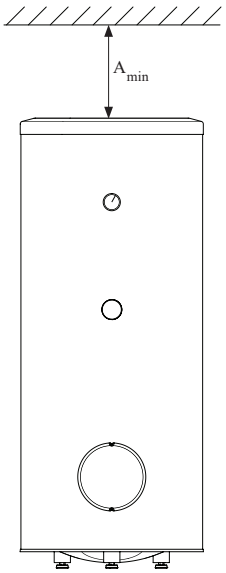

A_{min} is required on top to replace anode bar, and 500 mm is required in front to replace immersion heater if equipped.

Application	Connector pipe dia.	Type of anode	A_{min}
PT300	1"	Chain ø26 × 8	150 mm
	¾"	Titanium anode	200 mm

RC-HY20/40-W

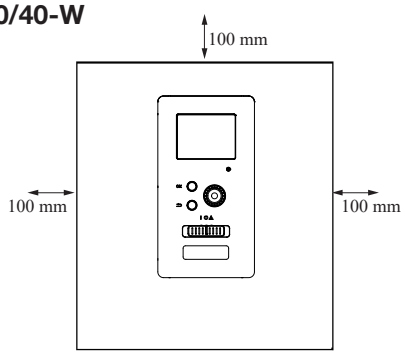

Hanging indoor unit

It is recommended that the split box is installed in a room with existing floor drainage, most suitably in a utility room or boiler room.

1. The bracket for the split box is mounted to the wall by use of appropriate screws.

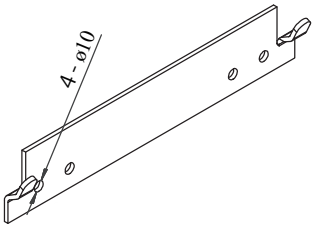

2. Insert HSB60-W in the bracket mounted to the wall.

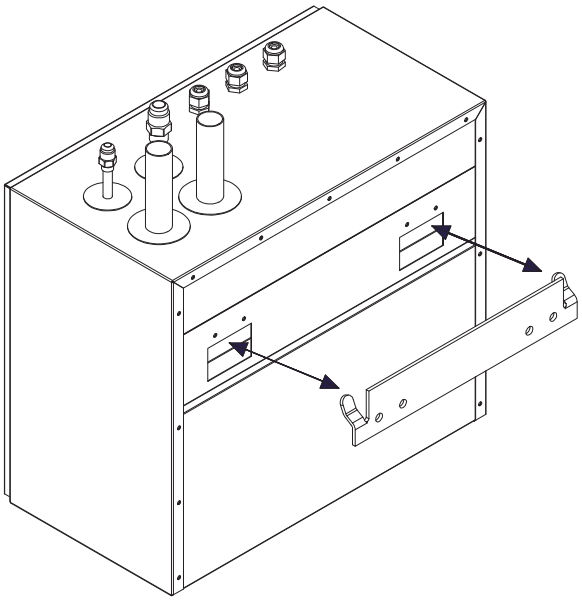

NOTE

Indoor unit weigh 16 kg excluding water inside.

Hanging control unit

Use all mounting points and install control unit upright against a flat wall. Make sure whole back surface faces the wall.

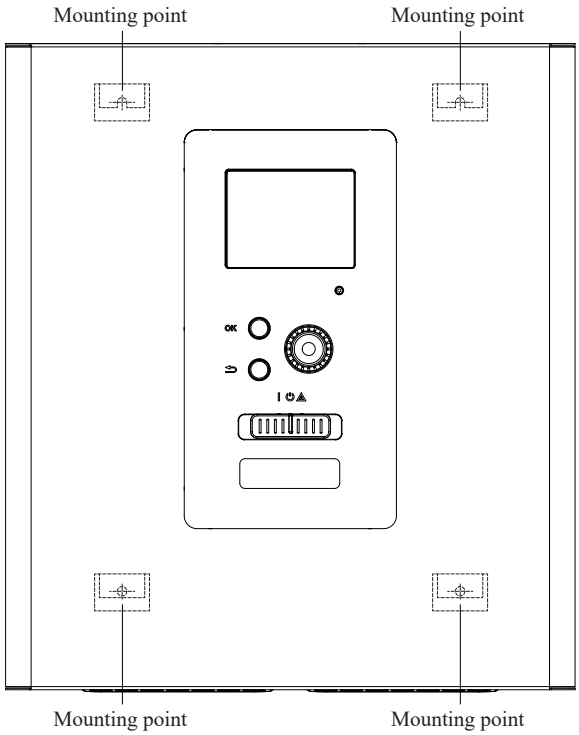

Dimensioning expansion vessel

The expansion vessel volume must be at least 5% of total water volume in the circulation system.

Initial pressure and max height difference

Recommended maximum height difference between expansion vessel and the highest point in the system is 5m.

The initial pressure of the pressure expansion vessel must be dimensioned according to the maximum height (H) between the vessel and the highest positioned radiator, see figure. An initial pressure of 0.5 bar (5 mvp) means a maximum permitted height difference of 5 m.

If the standard initial pressure in the pressure vessel is not high enough it can be increased by filling via the valve in the expansion vessel. The expansion vessel's standard initial pressure must be entered in the check list on User's manua1.

Any change in the initial pressure affects the ability of the expansion vessel to handle the expansion of the water.

Consult local distributor in case height difference exceeds 5m.

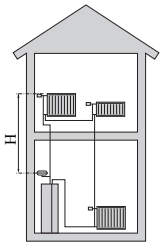

Recommended installation order

1. Hang indoor unit and control unit to appropriate position and connect indoor unit and tank unit.
2. Connect indoor unit to climate system, cold and hot water lines as well as any external heat sources. See page 13. Also see docking descriptions on page 22, 23 and further on.
3. Install refrigerant pipes according to the description on the Installation manual for outdoor unit.
4. Connect current limiter, any centralised load control and external contacts as well as the cable between indoor unit and outdoor unit.
5. Connect incoming electricity to indoor unit and/or outdoor unit. See page 28, 29.
6. Follow the commissioning instructions on page 30-40.

Pipe installation

General

Pipe installation must be carried out in accordance with current norms and directives.

A following table shows plumbing necessary for each product.

	Refrigerant	Plumbing
HSB	Necessary	Necessary
PT	—	Necessary
RC-HY	—	—

This heat pump system is designed for low or medium temperature heating system. It is recommended water temperature must not exceed 55°C on supply and 45°C on return at lowest design outdoor temperature (DOT) though indoor unit can operate with a return temperature of up to 65°C and an outgoing temperature from the unit of 65°C.

Indoor unit is not equipped with shut off valves; these must be installed outside the heat pump to facilitate any future servicing.

Indoor unit can be connected to the radiator system, floor heating system and/or fan convectors.

Safety valve is not equipped with in indoor unit. Make sure to install safety valve in the circuit.

Installation diagram

Outdoor unit provides heat for space heating and domestic hot water using free energy in the outdoor air within the range of low temperature up to -20°C. The system is controlled by RC-HY20-W or RC-HY40-W control unit.

HSB60-W

Indoor unit is equipped with plate heat exchanger. It needs to install expansion vessel, shut-off valves, safety valve, electric heater and circulation pump to make a complete heating system. In case domestic hot water is required, 3 way valve and tank is also necessary.

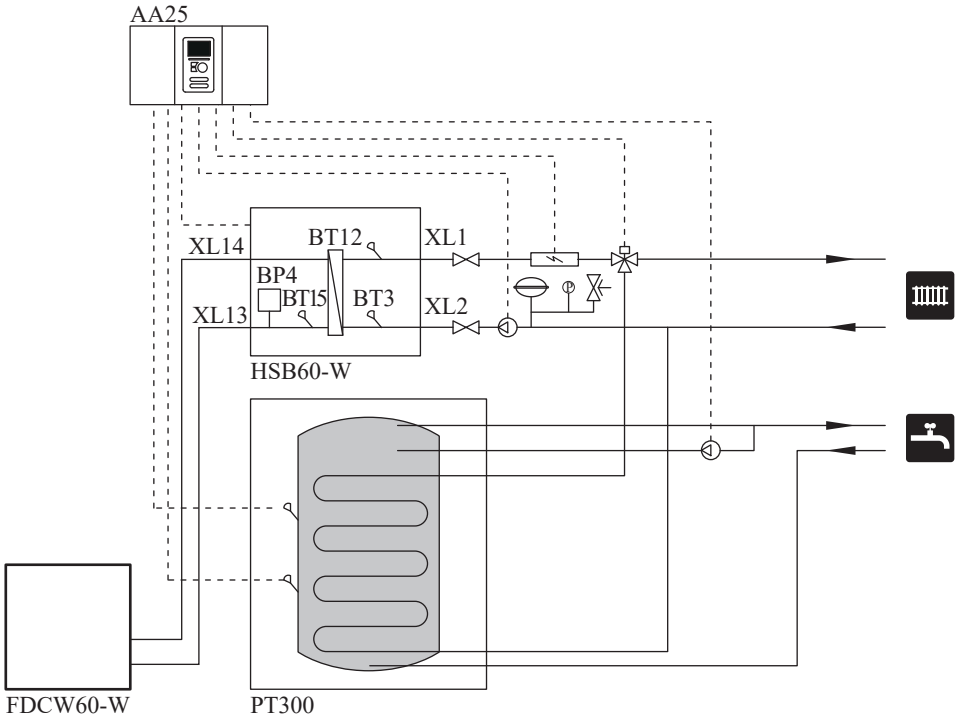

System requirements

The minimum water volume in the climate system is subject to the values in the table below. If it is not fulfilled, volume vessel must be installed.

For more options, see the docking description on Page 20.

(liter)

	With underfloor cooling application	Without underfloor cooling application
HSB60-W, FDCW60VNX-W	50	20

Overflow valve

NOTE

A free flow is required for all docking options, which means that an overflow valve must be installed.

The circulation pump may become damaged.

Pump capacity diagram

HSB60-W

HSB60-W is not equipped with circulation pump.

This graph shows the characteristic of CPD11-25M/65.

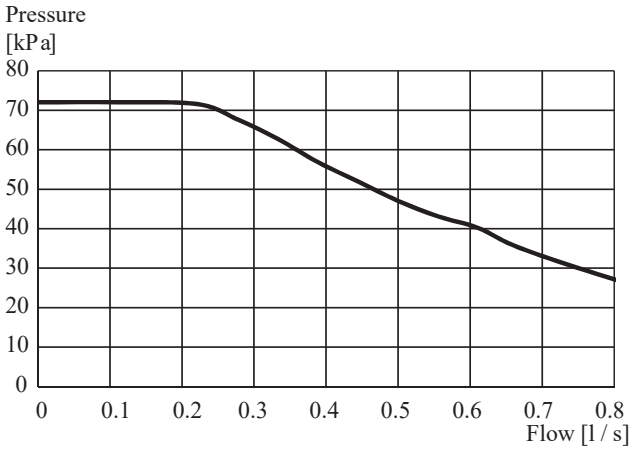

Pressure drop in indoor unit

HSB60-W

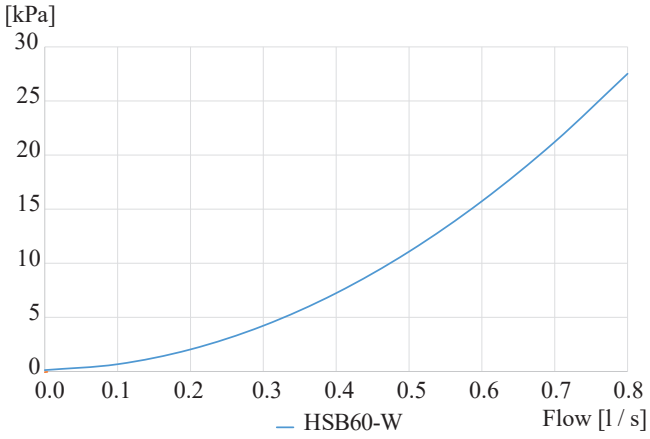

Connection of extra circulation pump

When connecting extra circulation pumps, requirements for pressure, maximum flow etc must be met. See page 23 for location.

NOTE

Non-return valve must be installed in case extra circulation pump is used. See page 23 for the position.

The circlulation pump may become damaged.

Dimensions and pipe connections

HSB60-W

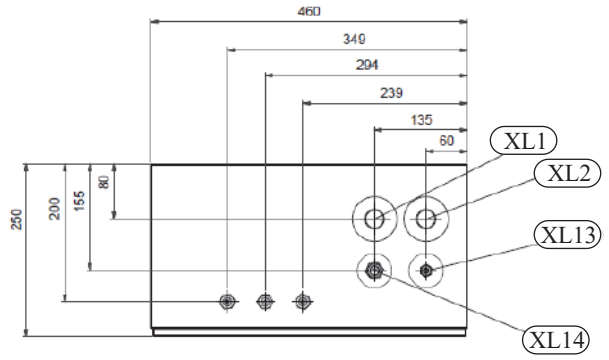

Pipe connections

XL1 (Red mark)	Climate system, flow ø22 mm
XL2 (Blue mark)	Climate system, return ø22 mm
XL14	Gas line refrigerant, flare ½″
XL13	Liquid line refrigerant, flare ¼″

PT300

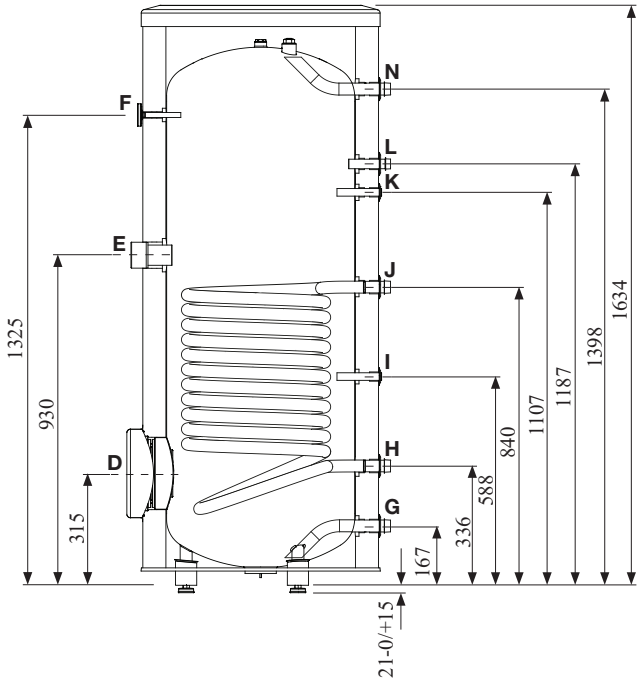

	Connection	U/m	PT300
D	Inspection opening	mm	ø120
E	Heating unit connection	inch	1½″Female
F	Thermometer enclosure	mm	ø10 Female
N	Hot water outlet	inch	1″Male
L	Hot water circulation	inch	¾″Male
K	Temp. sensor enclosure (BT7)	mm	ø16 Female
J	Coil supply	inch	1″Male
I	Temp. sensor enclosure (BT6)	mm	ø16 Female
H	Return from coil	inch	1″Male
G	Cold water input	inch	1″Male

Water circuit

Connection to heating system

Connect XL1 to supply line and X2 to return line from heating system.

- All required safety devices and shut-off valves must be installed as close to the indoor unit as possible.
- Install bleed valves where necessary, highest point of the water system in usual case.
- When connecting to a system with thermostats on all radiators, install an overflow valve or remove some of the thermostats to ensure sufficient flow.
- See section Dockings on page 21 for outline diagram.
- Install a safety valve with manometer on heating circuit and hot water circuit. (FL2)

  For HSB60-W install a safety valve for heating circuit on the water pipe returning to indoor unit since it doesn't have port for FL2.

  The entire length of the overflow water pipe from the safety valves must be inclined to prevent water pockets and must also be frost proof.
- The end of overflow water pipe from the safety valves must be left open to the atmosphere. The water may drip from the pipe.

HSB60-W

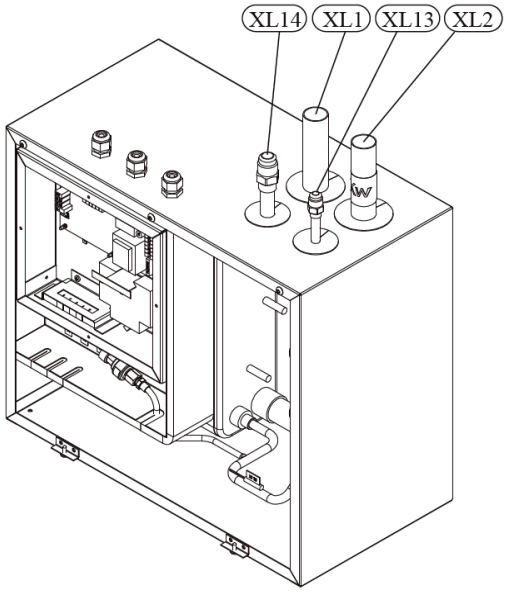

Install safety valve as close to XL2 as possible.

Connection to hot water heater

For HSB60 indoor unit, it is necessary to connect PT300 tank unit applying 3 way valve in order to use domestic hot water function.

Housing disassembly of tank unit

Removable housing with thermal insulation facilitates transport and installation of the storage tank. Disassembly the housing in the following order (see next page figure):

1. Remove the Temperature gauge, plug of the heating element connector pipe and blanking plate of the inspection opening.
2 Remove the upper cover of the housing together with thermal insulation.
3. Remove the plugs from the connector pipes and black bushings.
4. Remove the fixing screws and the strip connecting the housing jacket.
5. Remove the jacket surrounding the tank (housing jacket.)
6. Remove the four-piece thermal insulation.

After the installation of the storage tank in its final location, reinstall the removed components in the reverse order.

Housing and thermal insulation disassembly

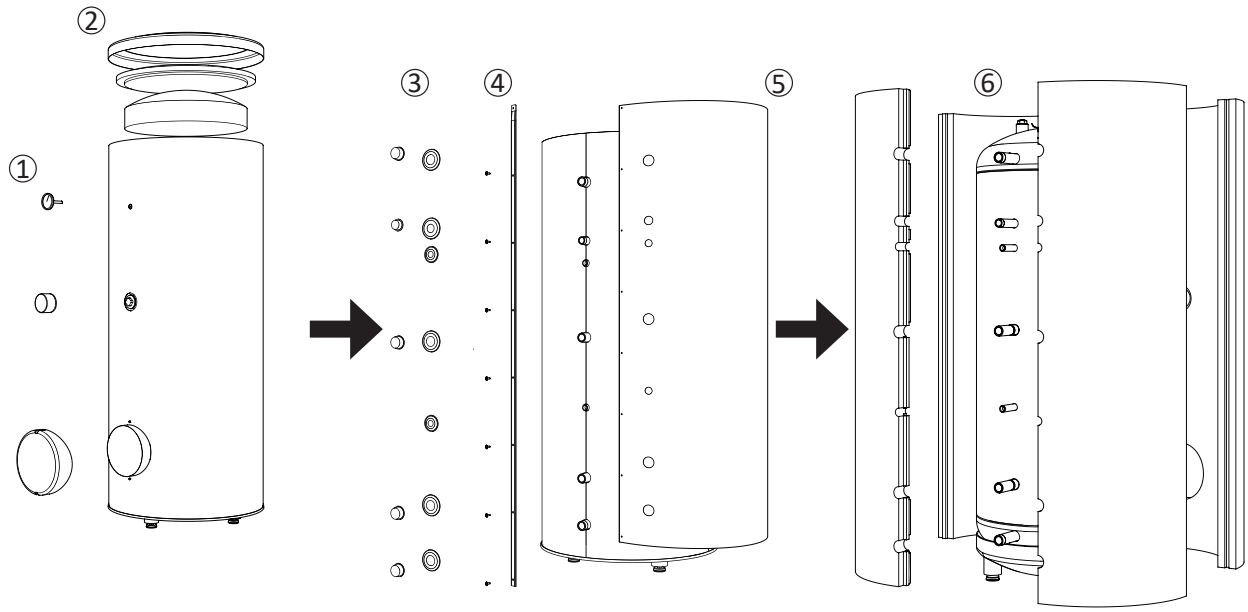

Connecting hot water tank to indoor unit

CAUTION

Installation and commissioning of the storage tank shall only be done by appropriately qualified installer. The installer should inform the user of the functions of the product and provide the necessary in formation on its safe use.

Information

We recommend installing a strainer in order to protect the pumps, check valve and the components of the heating system.

- Tank and its pipings to indoor unit must be installed indoors where the temperature wouldn't drop below 15°C in order to prevent pipings from icing.
- Maximum piping length between indoor unit and tank is 10 m.
- Tank unit should be placed on firm, preferably a concrete floor or foundation.
- Tank unit can be aligned using the adjustable feet.
- Protection against overpressure shall be made in accordance with the relevant regulations.
- Connect the heating system according to the installation diagram (see figure).

Installation diagram of the PT storage tank with one coil.

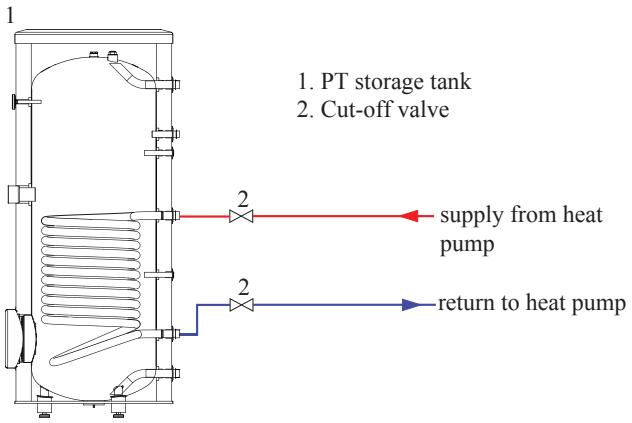

Connecting hot water tank to water main

- Install a mixing valve if the temperature exceeds 60 °C.
- It is recommended to install a thermostatic mixing valve for stable temperature hot water supply.
- Connect the storage tank to the water supply system of water pressure at least 1 bar and max 10 bar. Install a pressure reducer if the pressure at the cold water inlet to the tank is higher than allowed.
- Install a safety valve which have a maximum 10.0 bar opening pressure on the incoming domestic water line according to outline diagram in order to protect the storage tank against overpressure. Pressure increases during heating the water.
- During heating the water, small and temporary water flow from the safety valve can occur, which indicates that the pressure has increased above the rated value, which triggered the valve. This may in no way be prevented.
- Safety valve drain line should be installed with a decline, in an environment free of freezing and remain open to the atmosphere. The manufacturer is not responsible for flooding the room through the safety valve.
- Blocked safety valve can cause equipment failure. Drain the outflow from the safety valve to the sewerage or drain grate.
- See section Dockings on page 21 for outline diagram.
- Connect the water supply system according to the installation diagram.

Installation diagram of the PT storage tank with one coil.

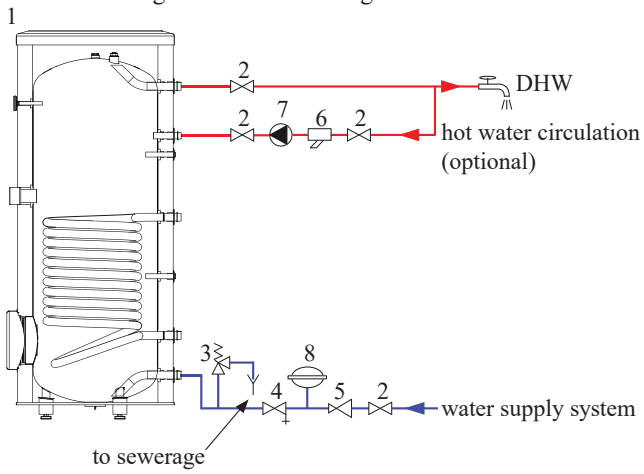

1. PT storage tank
2. Cut-off valve
3. Safety valve
4. Drain valve
5. Pressure reducer (option, if the pressure in the system exceeds the allowable value)
6. Strainer
7. Hot water circulating pump
8. Hot water expansion vessel

Information

In order to minimize the flow of water from the safety valve associated with the thermal expansion of the liquid, it is advisable to install a suitable expansion vessel at the cold water connection (see item 8.)

CAUTION

Installation of the appropriate safety valve in the cold water supply line protecting the unit against overpressure is mandatory!

CAUTION

Installation of necking of any kind (such as reducers, dirt pockets, etc.) and cut-off valves between the storage tank and the safety valve is not allowed. Only a T-pipe with a drain valve and a T-pipe with an expansion vessel may be installed in these line sections.

CAUTION

Never block the safety valve or drain line. This can cause a dangerous overpressure in the storage tank.

CAUTION

When heating water, slight, temporary discharge from the safety valve can occur. This is a correct safety valve function. Any attempt to interfere in its operati on can lead to the danger and destruction of the storage tank.

CAUTION

Never use the equipment with clogged safety valves.

Connection

After the installation and levelling the tank, follow the procedure below (for the connector pipe symbols, refer to page 15):

1. Remove protecting plugs from the connector pipes
2. Connect the hot water intake line (N).
3. Connect the cold water supply line together with the required safety valves (G).
4. If the system has the hot water circulation system, connect it to the connector pipe (L). Otherwise, plug the pipe.
5. Connect the supply (J) and return (H) of the heating medium to the coil.

CAUTION

If there is an electric heating module installed in the storage tank, fill the tank with water before connecting it to the electrical installation.

Hot water circulation circuit

Hot water circulation function is available for PT300.

PT300

If the system has the hot water circulation system, connect it to the port L (see page 15).

Then install the Cut-off valves, circulation pump and strainer.

Connection of external heat source

External heat source, e.g. a gas or oil boiler or electric heater, can be connected on supply line of heating system (XL1).

Refrigerant circuit

Connecting refrigerant pipes

See Installation manual for outdoor unit.

Piping insulation

Install insulation on all piping in order to avoid condensation during cooling operation.

It is also strongly recommended to insulate piping for heating only application in order to avoid getting burned or reducing the heating capacity.

The thickness of the insulation should be 20mm where the relative humidity exceeds 70%.

Dockings

General

Installation requirements

Hydrolution can be connected in several different ways, some of which are shown on the following pages.

	HSB60-W
	FDCW60VNX-W
Max pressure, climate system	0.25 MPa (2.5 Bar)
Highest recommended supply/return temperature	55/45°C
Max temperature, climate system	65 °C
Max temperature in indoor unit	65 °C
Max temperature from external heat source	65 °C
Max supply temperature with compressor at outdoor temp -20°C	58 °C
Min supply temp. cooling	7 °C
Max supply temp. cooling	25 °C
Min volume, climate system during heating, cooling	20 L
Min volume, climate system during underfloor cooling	50 L
Max flow, climate system	0.29 L/s
Min flow, climate system, at 100% circulation pump speed	0.19 L/s
Min flow, climate system	0.09 L/s
Nominal system flow heating (ΔT=5K)	0.29 L/s (6kW, 7/45°C)
Nominal system flow cooling (ΔT=5K)	0.29 L/s (6kW, 35/7°C)

External circulation pump must be used when the pressure drop in the system is greater than the available external pressure. In such cases, a bypass line with non-return valve must be installed.
Use an overflow valve if system flow cannot be guaranteed.

Symbol key

Symbol	Meaning
	Venting valve
	Shut-off valve
	Non-return valve
	Control valve
	Safety valve
	Temperature sensor
	Expansion vessel
	Pressure gauge
	Circulation pump
	Shunt / shuttle valve
	Fan

Docking alternatives

Heating system can be constructed in several different ways combining indoor unit, tank, control unit and other accessories.

For further option information, see page 73.

In the system example shown on the following page, heating, hot water as well as cooling operation are available.

Additional heating is helpful on the cold day of the year as the energy from the air is reduced. It is also recommended as back-up in case the heat pump operation is blocked for any reason (e.g. ambient temperature exceeds the operation limit of heat pump).

NOTE

The heating medium side and the hot water side must be fitted with the necessary safety equipment in accordance with the applicable regulations.

This is the outline diagram. Actual installations must be planned according to applicable standards.

Explanation

AA25	**Controller**
BT1	Outdoor sensor[1)]
BT6	Temperature sensor, hotwater charging[1)]
BT7	Temperature sensor, hot water top[1)]
BT25	Temperature sensor, external supply line[1)]
BT50	Room sensor
BT63	Temperature sensor, external supply line after electric heater
BT71	Temperature sensor, external return line[1)]
GP10	Circulation pump, Heating medium
QN10	Reversing valve, Hot water/Heating medium[2)]
EB1	**Additional heat**
EB1	Immersion heater
KA1	Auxiliary relay/Contactor[2)]
EB101	**Heat pump system**
BP4	Pressure sensor, condenser[3)]
BT3	Temperature sensor, return line[3)]
BT12	Temperature sensor, condenser supply line[3)]
BT15	Temperature sensor, fluid pipe[3)]
EB101	Heat pump
FL10	Safety valve
GP12	Charge pump[2)]
HQ1	Particle filter[3)]
QM1	Drain valve, Heating medium
QM31	Shut-off valve, Heating medium, Flow
QM32	Shut off valve, Heating medium, Return
QM43	Shut-off valve
EQ1	**Cooling system**
BT64	Temperature sensor, cooling supply line[2)]
CP6	Single jacket accumulator tank, cooling
GP13	Circulation pump, cooling
QN12	Reversing valve, Cooling/Heating[2)]
Miscellaneous	
CM1	Expansion vessel closed, Heating medium
CP5	Buffer vessel
CP10	Accumulator tank with hotwater heating
EB20	Immersion heater
FL2	Safety valve, Heating medium
KA1	Auxiliary relay/Contactor
RN10	Trim valve

1) Included in and supplied with controller
2) Included in and supplied with accessory
3) Included in indoor unit

Installation with indoor unit HSB60-W, tank PT300, controller RC-HY20/40-W with step controlled additional heat before reversing valve for hot water and cooling function (4 pipe system)

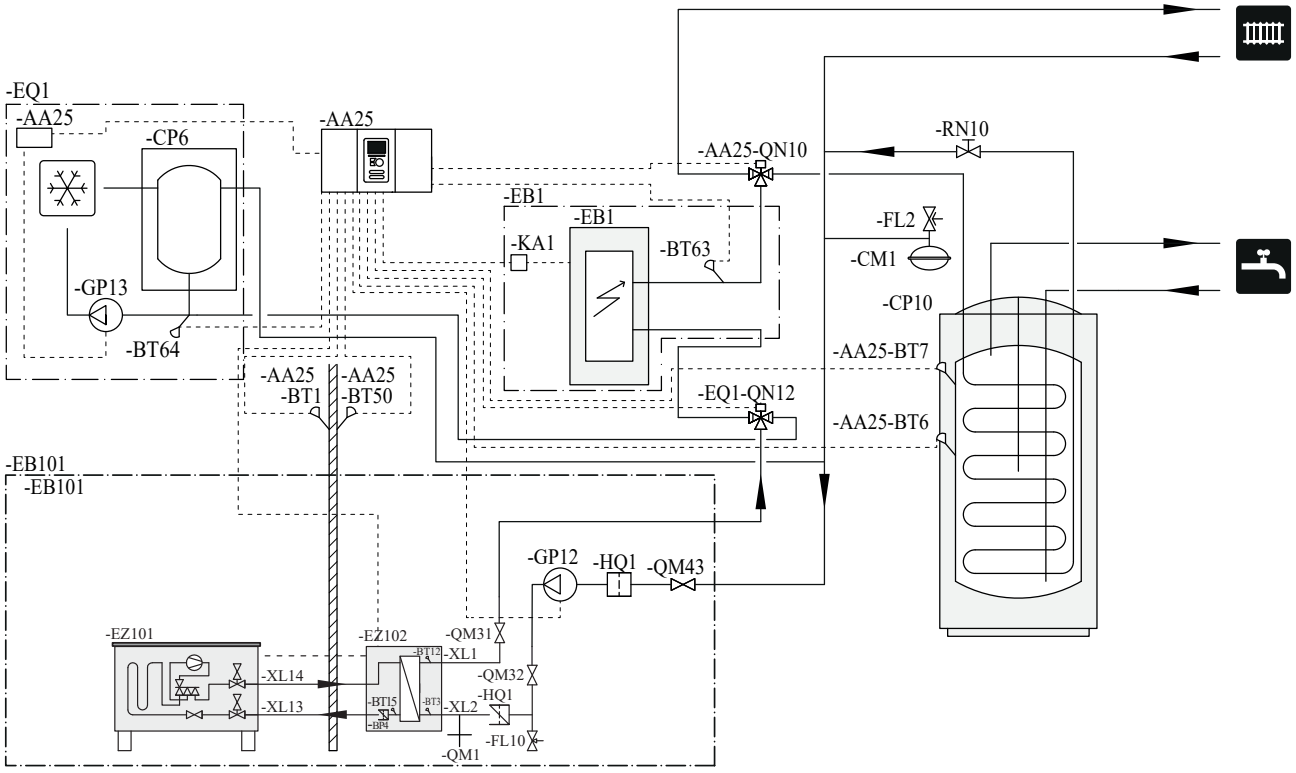

NOTE

Not all components are shown in this outline diagram.

Controller (AA25) starts and stops the heat pump (EB101) to meet the heating and hot water demand.

At simultaneous heating and hot water demand, the reversing valve (AA25-QN10) switches periodically between the climate system and the water heater/accumulator tank (CP10). When the hot water heater/accumulator tank is fully charged, the reversing valve switches to the climate system.

Additional heat (EB1) is turned on automatically when the heating demand exceeds the heat pump capacity. This is used for both heating and charging hot water.

The additional heat can also be used for water heater when a higher temperature is required than the heat pump can produce.

During cooling operation, the reversing valve (EQ1-QN12) switches to the cooling system (EQ1). If several simultaneous demands occur while there is a cooling demand, the system reacts differently. In the event of a hot water demand, the reversing valve switches back and hot water is produced until the demand is fulfilled. In the event of a heating demand, the reversing valve switches periodically between cooling and heating. If the cooling demand is met, the reversing valve switches back to basic mode (heating/hot water).

Indoor unit HSB60-W, tank PT300, controller RC-HY20/40-W with step controlled additional heat after reversing valve for hot water and cooling function (4 pipe system)

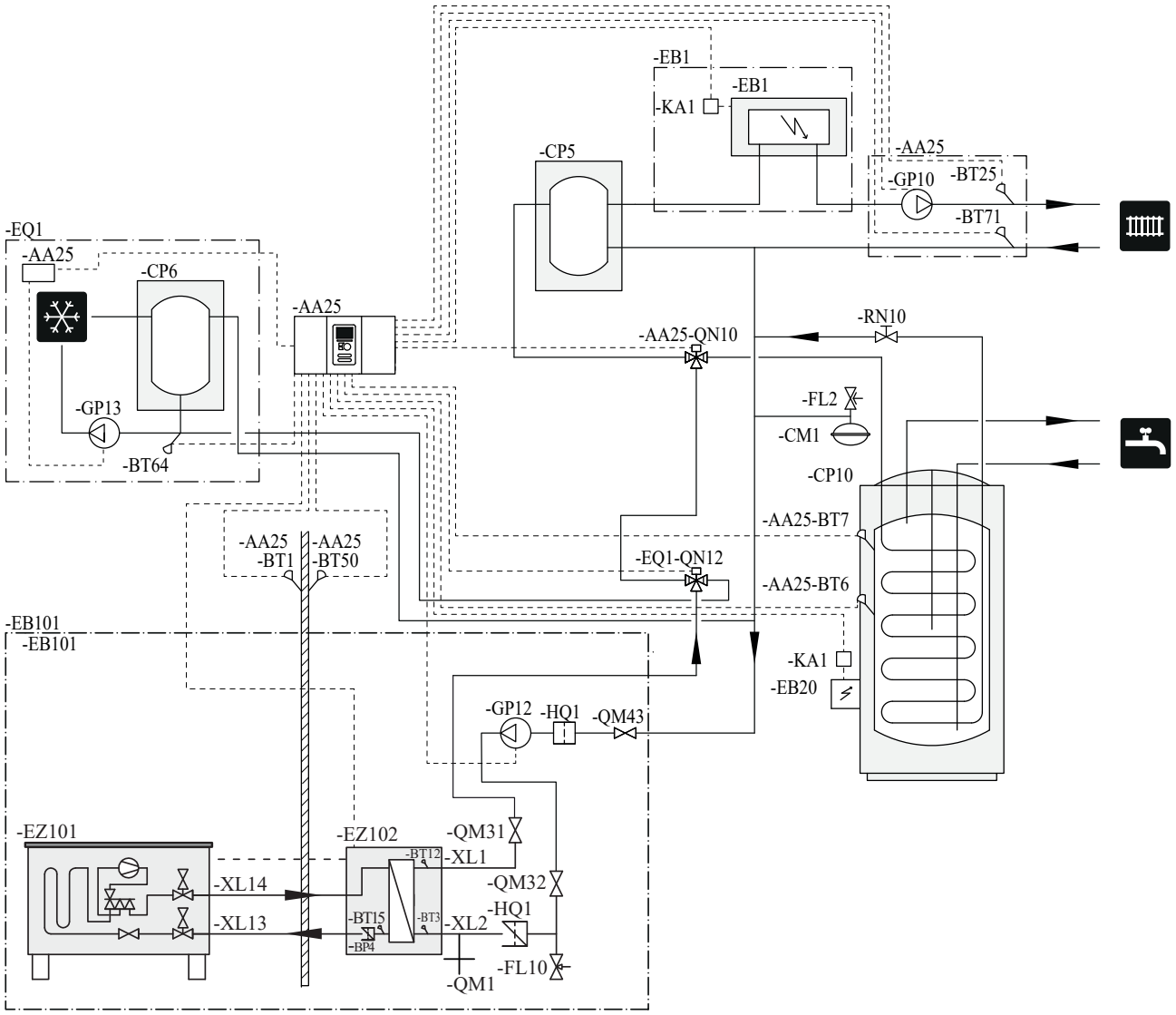

NOTE

Not all components are shown in this outline diagram.

This installations alternative is suitable for more complex installations with a focus on comfort.

Controller (AA25) starts and stops the heat pump (EB101) to meet the heating and hot water demand of the installation.

At simultaneous heating and hot water demand the reversing valve (AA25-QN10) switches periodically between the climate system and the water heater/accumulator tank (CP10). When the hot water heater/accumulator tank is fully charged, the reversing valve switches to the climate system.

Additional heat (EB1) is turned on, automatically when the heating demand exceeds the heat pump capacity.

Immersion heater (EB20) in the water heater/accumulator tank is used during the time to produce hot water if the heat pump is used for heating at the same time.

The immersion heater (EB20) can also be used if a higher temperature of hot water is required than the heat pump can produce.

During cooling operation, the reversing valve (EQ1-QN12) switches to the cooling system (EQ1). If several simultaneous demands occur while there is a cooling demand, the system reacts differently. In the event of a hot water demand, the reversing valve switches back and hot water is produced until the demand is fulfilled. In the event of a heating demand, the reversing valve switches periodically between cooling and heating. If the cooling demand is met, the reversing valve switches back to basic mode (heating/hot water).

Electrical installation

General

Indoor unit must be installed via an isolator switch in accordance with the local codes and regulations.

- Disconnect the indoor unit, outdoor unit and control unit before insulation testing of the house wiring.
- If the building is equipped with an earth-fault breaker, Hydrolution should be equipped with a separate one.
- For the electrical wiring diagram, see page 85.
- Do not lay communication, sensor or signal cables for external connection close to high voltage lines.
- Minimum cross section of communication, sensor or signal cables for external connection must be 0.5mm^2 up to 50 m, for example EKKX, LiYY or equivalent.
- Use screened three core cable for communication between controller (RC-HY20/40-W) and indoor unit (HSB60-W).
- When laying cables into indoor units and controllers, be sure to route the cable grommet (UB1 AND UB2).
- Be careful to route cables not to be damaged by metal edge or trapped by panels.
- Outdoor unit is equipped with a single phase compressor. This means that phase L3 is loaded with up to 15 A during compressor operation.

NOTE

Electrical installation and service must be carried out under the supervision of a qualified electrician.

Turn off the circuit breaker before carrying out any servicing.

Electrical installation and wiring must be carried out in accordance with the stipulations in force.

Make sure to turn off the power supply during installation.

NOTE

Do not turn on the power on control until the boiler is filled with water.

The circulation pump and immersion heater may become damaged.

NOTE

If the power supply cable is damaged, only authorised person may replace it to avoid danger or damage.

Principle diagram, electrical installation

HSB60-W

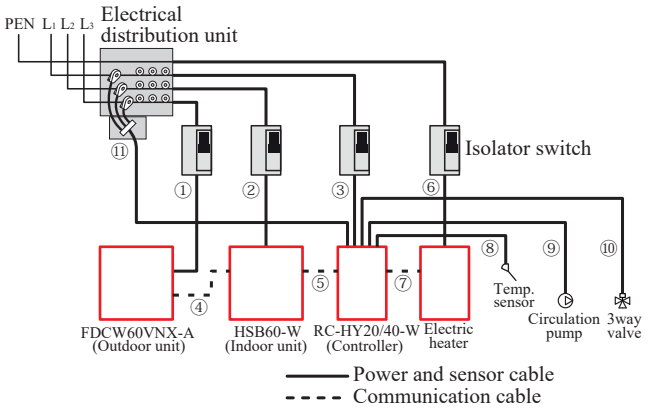

Item		Cable size
①	Power - Outdoor unit	3core, 2.0mm^2 (power cable)
②	Power - Indoor unit	3core, 1.5mm^2 (power cable)
③	Power - Controller	3core, 1.5mm^2 (power cable)
④	Outdoor unit - Indoor unit	2core, 1.5mm^2 (communication cable)
⑤	Indoor unit - Controller	3core, 0.5mm^2, LiYY,EKKX or equivalent (communication cable)
⑥	Power - Electrical heater	5core, φ2.0mm (power cable)
⑦	Controller - Electrical heater	4core, 0.5mm^2 (communication cable)
⑧	Controller - Temp sensors	2core, 0.5mm^2 (each sensor)
⑨	Controller - Circulation pump	3core, 0.75mm^2 (power cable) 2core, 0.5mm^2 (communication cable)
⑩	Controller - 3way valve for switching heating/hot water	3core, 0.75mm^2
⑪	Current sensor (RC-HY40-W only)	6core, 0.5mm^2

The cable size shown on the above table is minimum size. Choose appropriate size according to local laws and regulations.

NOTE

When laying cables into the indoor unit and controllers, be sure that the cables are groomed to avoid excessive resistance to the terminal blocks.

If there is an excessive resistance applied to the wiring, they may disconnect and damage the unit (short circuit)

Electrical components

HSB60-W

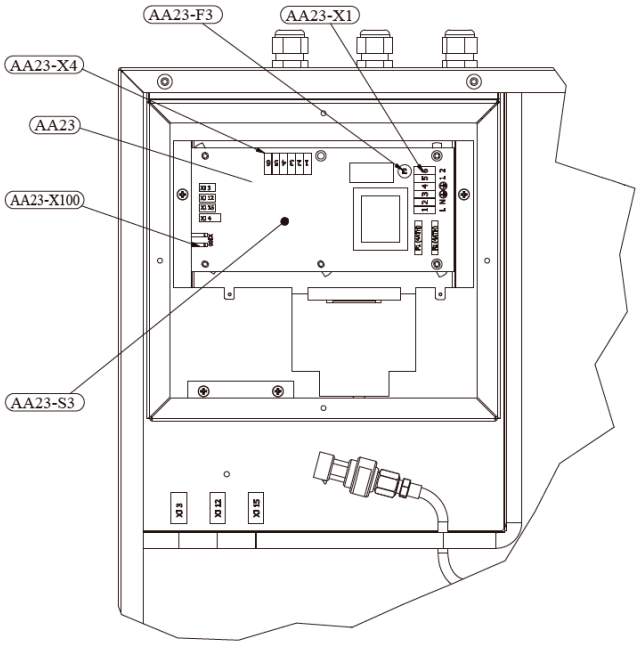

Explanation

AA23	Communication board
AA23-F3	Fuse for external heating cable
AA23-S3	DIP switch, addressing of outdoor unit
AA23-X1	Terminal block, incoming supply, connection of KVR
AA23-X4	Terminal block, communication with indoor module / control module
AA23-X100	Terminal block, communication outdoor module FDCW

RC-HY20-W

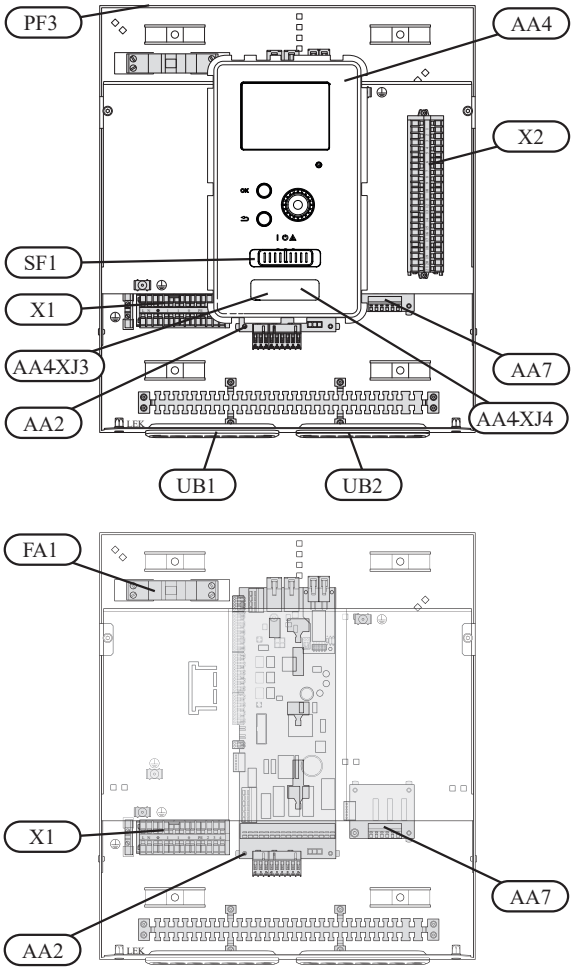

Explanation

AA2	Base card
AA4	Display unit AA4-XJ3 USB socket
AA4-XJ4	Service outlet (No function)
AA7	Extra relay circuit board
FA1	Miniature circuit-breaker
X1	Terminal block, incoming electrical supply
X2	Terminal block, control signal circulation pump, sensors AUX inputs and heat pump
SF1	Switch
PF3	Serial number plate
UB1	Cable grommet, incoming supply electricity, power for accessories
UB2	Cable grommet, signal

RC-HY40-W

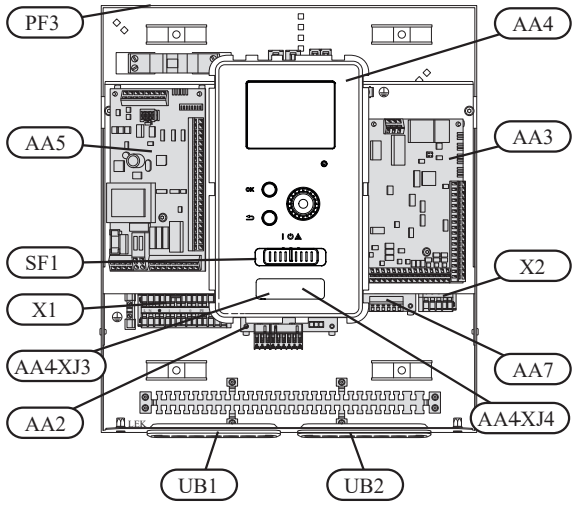

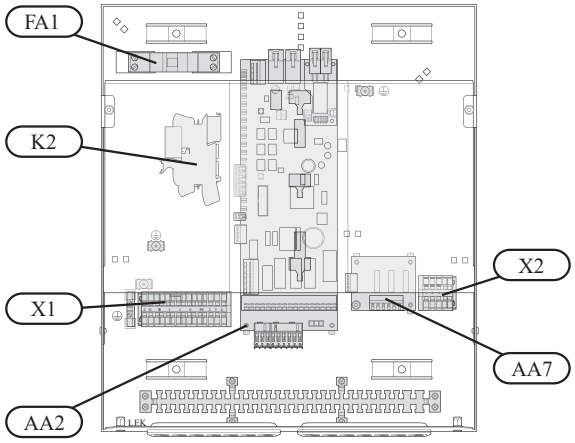

Explanation

AA2	Base card
AA3	Input circuit board
AA4	Display unit
AA4-XJ3	USB socket
AA4-XJ4	Service outlet (No function)
AA5	Accessory card
AA7	Extra relay circuit board
FA1	Miniature circuit-breaker
K2	Emergency mode relay
X1	Terminal block, incoming electrical supply
X2	Terminal block, AUX4 - AUX6
SF1	Switch
PF3	Serial number plate
UB1	Cable grommet, incoming supply electricity, power for accessories
UB2	Cable grommet, signal

Accessibility, electrical connection for controller

The cover of the control module is opened using a Torx 25 screwdriver. Assembly takes place in the reverse order.

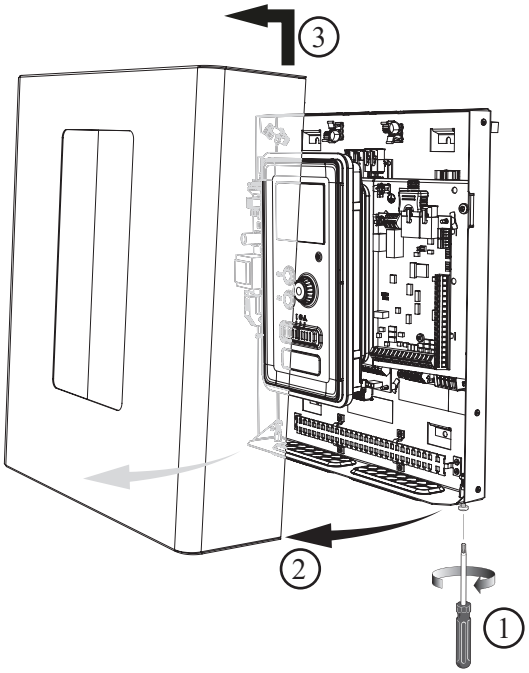

NOTE

The cover to access the base board is opened using a Torx 25 screwdriver

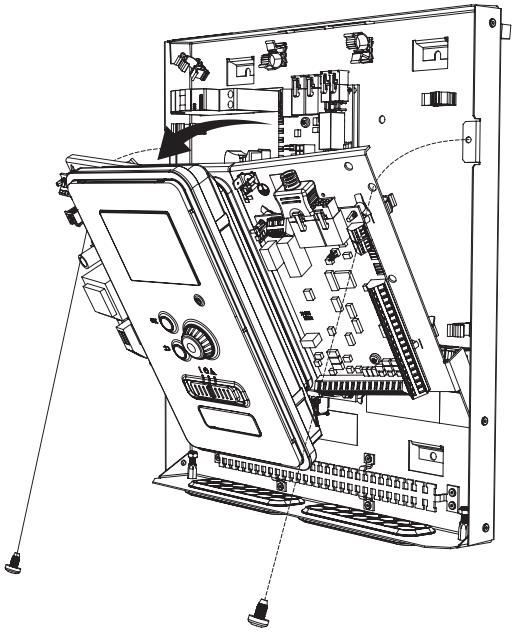

The display may need to be moved for easier access when connecting electrics. This is easily done by following these steps.

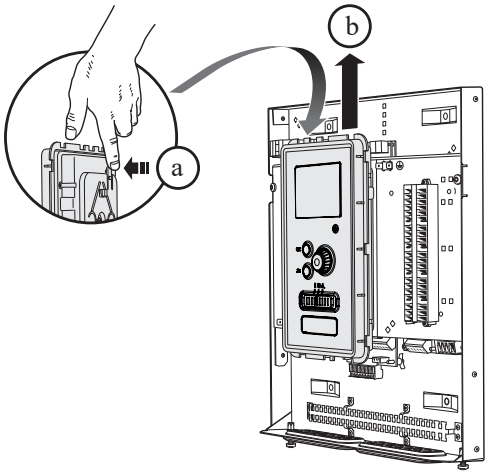

1. Press in the catch on the upper rear side of the display unit towards you (a) and move the display unit upwards (b) so that the mountings unhook from the panel.

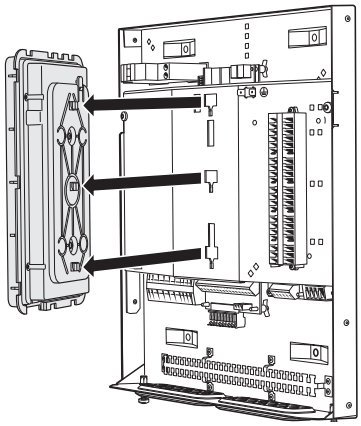

2. Lift the display unit from its mountings.

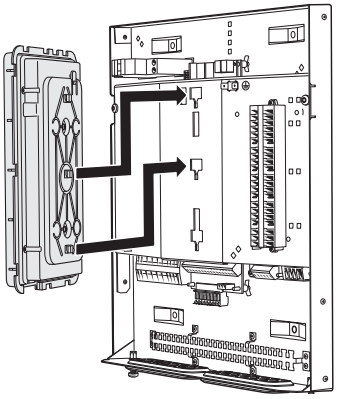

3. Align the two lower mountings on the reverse of the display unit with the two upper holes in the panel as illustrated.

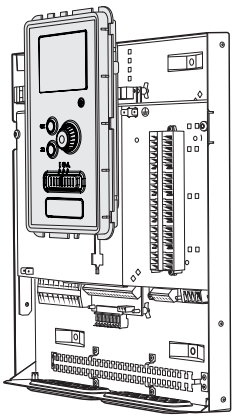

4. Secure the display on the panel.

5. When the electrical connection is ready the display must be reinstalled with three mounting points again, otherwise the front cover cannot be installed.

Cable lock

Use a suitable tool to release/lock cables in the terminal block.

HSB60-W, RC-HY20/40-W

Terminal block on the electrical card

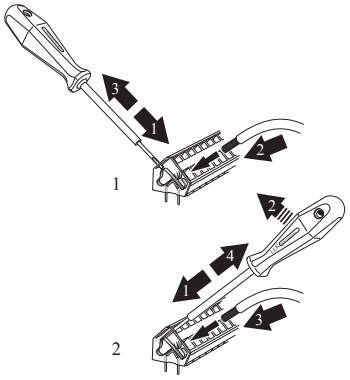

Terminal block

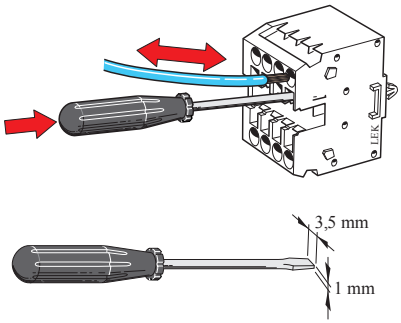

Connection for HSB60-W

NOTE

To prevent interference, unscreened communication and/or sensor cables to external connections must not be laid closer than 20 cm from high voltage cables.

Power supply

Indoor unit

In case of HSB60-W, power supply is made to indoor unit, outdoor unit and controller separately. 230V 1AC 50Hz is applied.

For indoor unit, incoming supply is connected on AA23-X1 terminal.

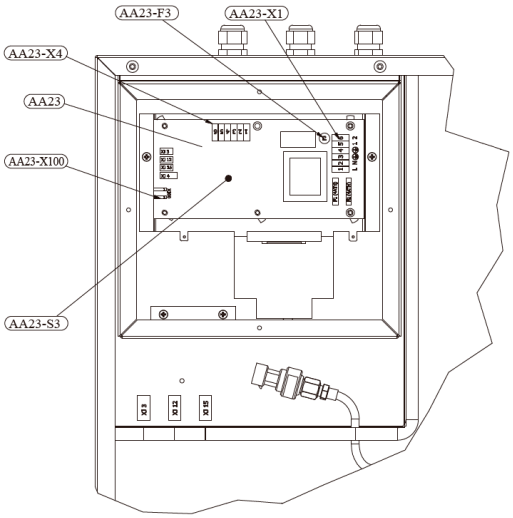

For outdoor unit, incoming supply is connected on TB terminal. See figure on Connection between indoor and outdoor unit.

Controller

Connection between indoor and outdoor unit

The communication cable between indoor and outdoor unit is connected between terminal AA23-X100 in indoor unit and TB in outdoor unit. Screened 2 core cable is recommended.

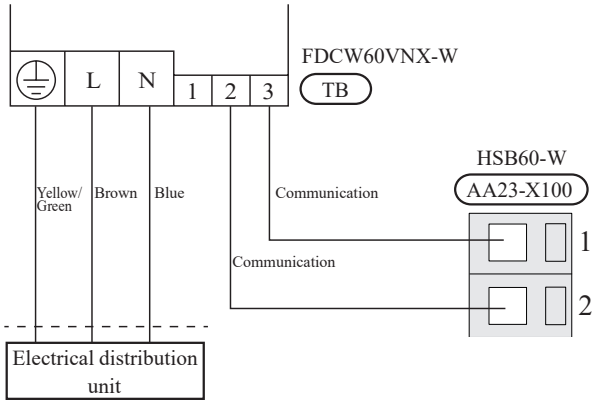

Connection between indoor unit and controller

See Connection for RC-HY20/40-W

Cascade connection setting

In case of cascade connection system, it is necessary to allot unique address to each indoor unit. Set the dip switch S3-1, -2 and -3 according to the following table.

Address	S3:1	S3:2	S3:3
1	OFF	OFF	OFF
2	On	OFF	OFF
3	OFF	On	OFF
4	On	On	OFF
5	OFF	OFF	On
6	On	OFF	On
7	OFF	On	On
8	On	On	On

Recommended fuse size for HSB series

The recommended fuse size shown in the following table is reference value. Choose appropriate size according to local laws and regulations.

	Fuse size
Indoor unit (HSB60-W)	6A / 230V 1AC 50Hz
Outdoor unit (FDCW60VNX-W)	20A / 230V 1AC 50Hz
Controller (RC-HY20/40-W)	10A/ 230V 1AC 50Hz
Electric heater (ELK9M) (reference)	16 A/400V 3NAC 50Hz

Recommended cable size for HSB60-W

The recommended cable size shown in the following table is reference value. Choose appropriate size according to local laws and regulations.

	Cable size
Power – Indoor unit	3core, 1.5mm^2 (power cable)
Power – Outdoor unit	3core, 2.0mm^2 (power cable)
Indoor unit – Outdoor unit	2core, 1.5mm^2 (communication cable)
Indoor unit – Controller	3core, 0.5mm^2, LiYY, EKKX or equivalent (communication cable)

RC-HY20/40-W

Cable connection is different according to the system structure. Refer to the connection method according to the indoor unit

Power source

Connect the power cable on X1 terminal as shown below.

RC-HY20/40-W must be installed via an isolator switch with a minimum breaking capacity of 3mm. Minimum cable area must be sized according to the fuse rating used.

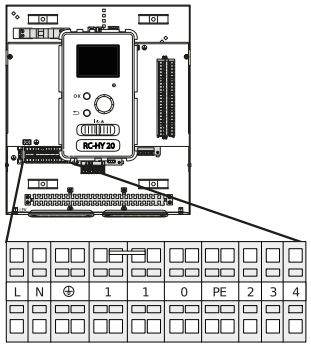

RC-HY20/40-W X1

RC-HY20-W

Connection between controller and indoor unit

HSB60-W

Signal cable is connected between the controller and the indoor unit with screened 3 cores cable for HSB series.

Connect the port 19 (A), 20 (B) and 21 (GND) on X2 terminal on RC-HY20-W on the port 1,2 and 3 on X4 terminal on AA23 board respectively

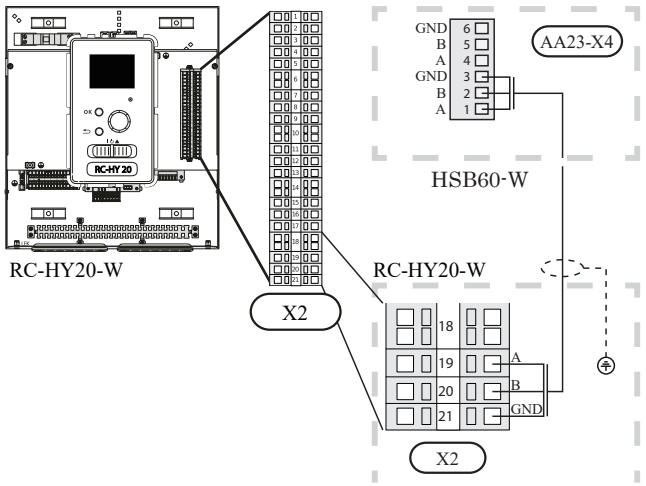

Connection between controller and circulation pump (GP12)

For HSB60-W, circulation pump (GP12) is installed outside of indoor unit. Choose correct terminal according to the type of controller.

Connect the port 5, 6 and 7 on X4 terminal on AA2 board on RC-HY20-W to the port PE, N and L on circulation pump respectively. Control signal cable is connected between the port 1 and 2 on X2 terminal on RC-HY20-W and PWM and GND on circulation pump respectively as shown below.

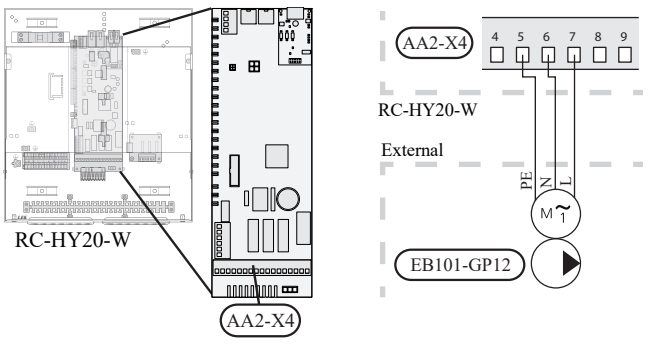

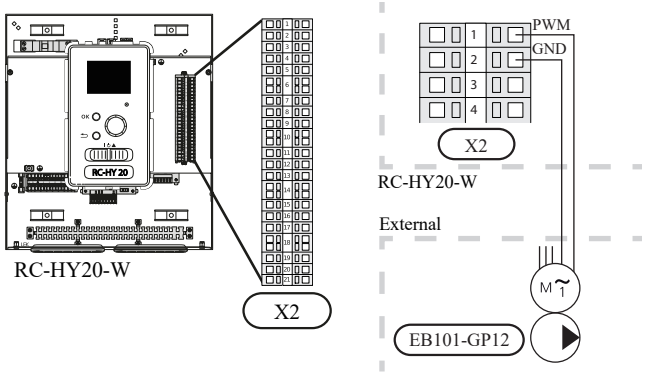

Connection between controller and 3-way valve (QN10/QN12)

3-way valve is used for switching heating / hot water production (QN10), or switching heating / cooling (QN12). Install appropriate valves according to the system structure on site.

HSB60-W is not equipped with 3-way valve. Install the valves on right position according to the diagram and connect wires on appropriate port according to the type of controller.

- **3-way valve for Heating / Hot water (QN10)**

Connect the N, Control and L wire on 3-way valve to the port 2, 3 and 4 on X4 terminal on AA2 board on RC-HY20-W respectively as shown below.

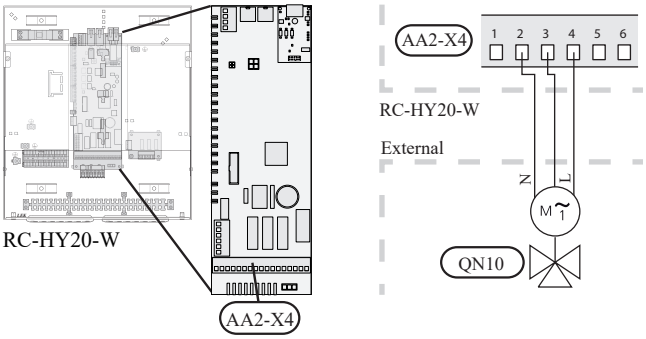

- **3-way valve for Heating / Cooling (QN12)**

QN12 can be controlled with potential free variable relay. Connect L and Control wire on 3-way valve to the port 15 and 16 on X4 terminal on AA2 board on RC-HY20-W respectively. Also, connect L and N wire to power supply as shown below.

Additional setting is necessary in menu 5.4. See Menu system for details.

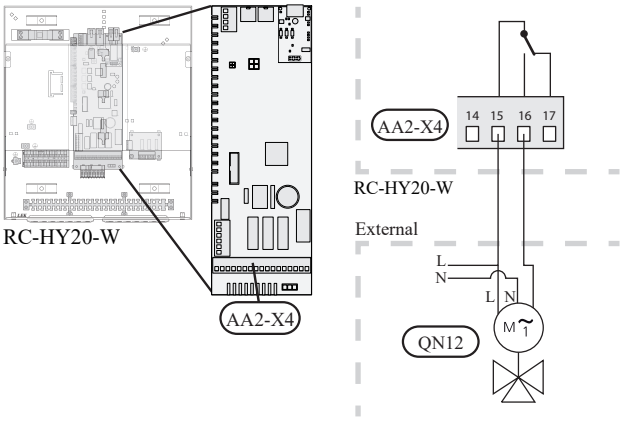

CAUTION

The relay outputs can have a max load of 2 A at resistive load (230V AC).

Connection between controller and sensors

Sensor connection is different according to the combination of indoor unit and controller. Refer to the appropriate combination mentioned below.

Use two-core cable with a minimum 0.5mm2 cross section.

Regarding other sensors not mentioned in this chapter, refer to page 34, Optional connections.

- **Ambient air temperature sensor BT1**

Install ambient air temperature sensor (BT1) in the shade on a wall facing north or north-west, so it is unaffected by the morning sun.

Connect the sensor to the port 3 and 6 on X2 terminal.

If a conduit is used it must be sealed to prevent condensation in the sensor capsule.

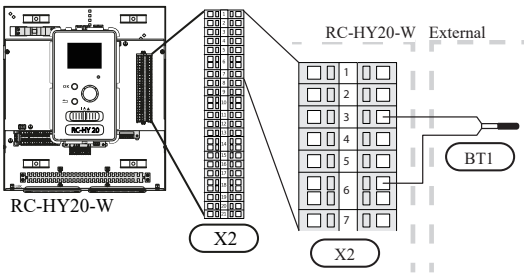

- **Hot water charging sensor BT6 (tank bottom)**

The temperature sensor, hot water charging (BT6) is placed in the submerged tube on the water heater.

Connect the sensor to the port 5 and 6 on X2 terminal.

Hot water charging is activated in menu 5.2 or in the start guide.

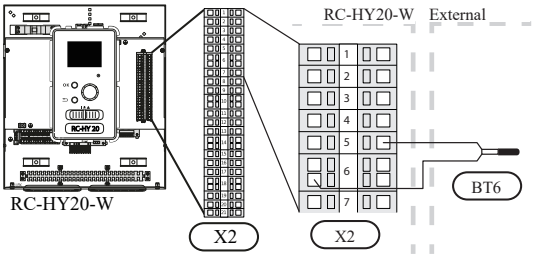

- **Hot water sensor BT7 (tank top)**

A temperature sensor for hot water top (BT7) can be connected to RC-HY20 to show the water temperature at the top of the tank (if it is possible to install a sensor at the top of the tank).

Connect the sensor to the port 4 and 6 on X2 terminal.

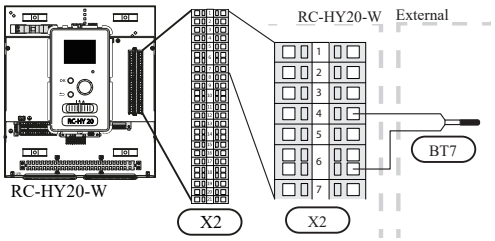

- **Temperature sensor BT63, outlet at additional heater**

This sensor is used in case electric heater is placed before 3-way valve (QN10) for switching heating/hot water (see page 22 for diagram).

Connect temperature sensor, external supply after electric heater (BT63) to the port 9 and 10 on terminal X2.

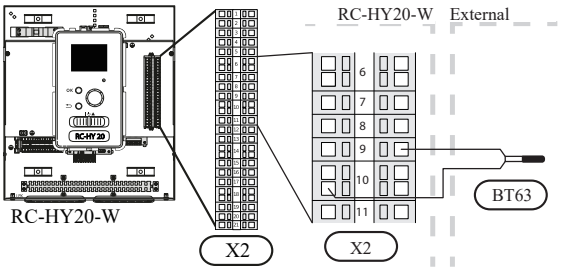

- **Temperature sensor BT25, outlet for heating**

This sensor is used in case electric heater is placed after 3 way valve (QN10) for switching heating/ hot water (see page 23 for diagram).

Connect temperature sensor, external supply (BT25) to the port 8 and 10 on X2 terminal.

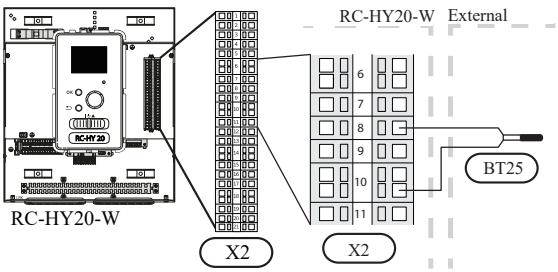

- **Temperature sensor BT71, return line for heating**

This sensor is used in case electric heater is placed after 3 way valve (QN10) for switching heating/ hot water (see page 23 for diagram).

For connection, see page 34, AUX inputs.

- **Temperature sensor BT64, outlet for cooling**

This sensor is used in case cooling application is required.

For connection, see page 34, AUX inputs.

Optional connections

◦ **Room sensor BT50**

Room sensor can be connected to controller.

The room temperature sensor has up to three functions:

1. Show current room temperature in the control module display.
2. Option of changing the room temperature in °C.
3. Makes it possible to change/stabilise the room temperature.

Install the sensor in a neutral position where the set temperature is required. A suitable location is on a free inner wall in a hall approx. 1.5 m above the floor.

Do not install the sensor where correct room temperature cannot be detected such as in a recess, between shelves, behind a curtain, above or close to a heat source, in a draft from an external door or in direct sunlight.

Closed radiator thermostats can also cause problems.

The control module can operate without the sensor, but if user wants to read off the accommodation's indoor temperature in controller display, the sensor must be installed.

Connect the room sensor to the port 7 and 10 on X2 terminal.

If the sensor is to be used to change the room temperature in °C and/or to change/stabilise the room temperature, the sensor must be activated in menu 1.9.4.

If the room sensor is used in a room with underfloor heating, it should only have an indicatory function, not control of the room temperature.

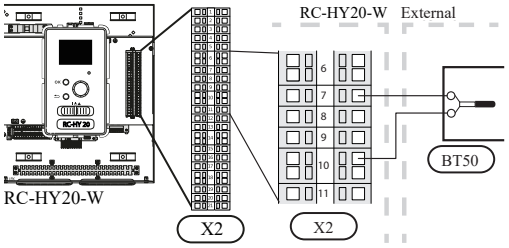

CAUTION

Changes of temperature in accommodation take time. For example, short time periods in combination with underfloor heating will not give a noticeable difference in room temperature.

Use two-core cable with a minimum 0.5mm^2 cross section.

◦ **Step controlled additional heat**

NOTE

Mark up any junction boxes with warnings for external voltage.

External step controlled additional heat can be controlled by up to three potential-free relays in the control module (3 step linear or 7 step binary). Alternatively two relays (2 step linear or 3 step binary) can be used for step controlled additional heat, which means that the third relay can be used to control the immersion heater in the water heater/accumulator tank.

Step in occurs with at least 1 minute intervals and step outs with at least 3 seconds intervals.

Step 1 is connected to terminal block X2:2 on the additional relay board (AA7).

Step 2 is connected to terminal block X2:4 on the additional relay board (AA7).

Step 3 or immersion heater in the water heater/accumulator tank is connected to terminal block X2:6 on the additional relay board (AA7).

The settings for step controlled additional heat are made in menu 4.9.3 and menu 5.1.12.

All additional heat can be blocked by connecting a potential-free switch function to the software controlled input on terminal block X2 which is selected in menu 5.4.

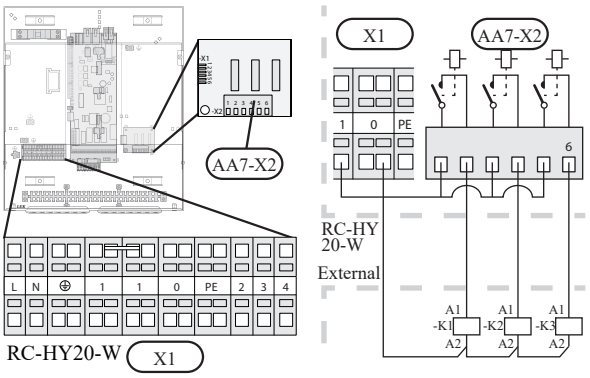

If the relays are to be used for control voltage, bridge the supply from terminal block X1:1 toX2:1, X2:3 and X2:5 on additional relay board (AA7). Connect the neutral from the external additional heat to terminal block X1:0.

Use a cable with appropriate cross section.

For connection, see the installation manual for additional heater.

◦ **Relay output for emergency mode**

NOTE

Mark up any junction boxes with warnings for external voltage.

When the switch (SF1) is in "⚠" mode (emergency mode) the circulation pump is activated (EB101-GP12).

CAUTION

No hot water is produced when emergency mode is activated.

The emergency mode relay can be used to activate external additional heat. Between the port 2 and 4 is closed during emergency mode. An external thermostat must be connected to the control circuit (port 4) to control the temperature. Ensure that the heating medium circulates through the external additional heating.

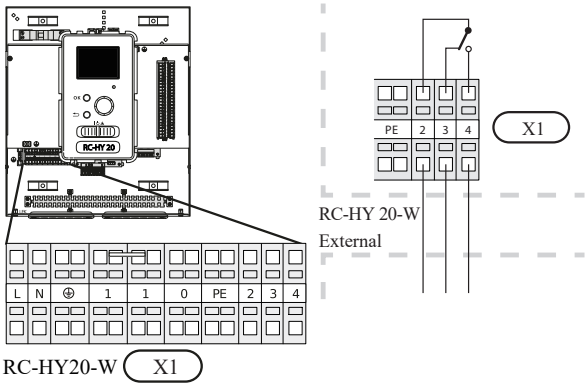

If the relay is to be used for control voltage, bridge the supply from terminal block X1:1 to X1:2 and connect neutral and control voltage from the external additional heat to X1:0 (N) and X1:4 (L).

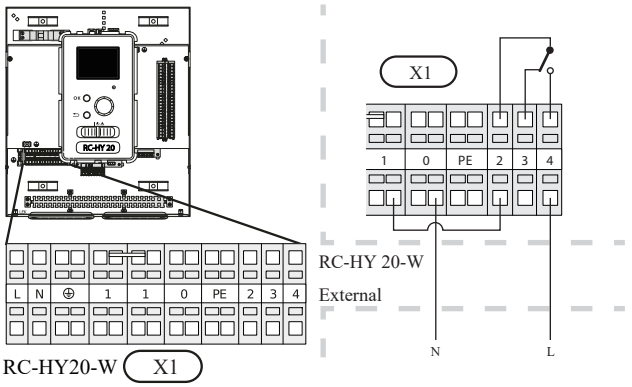

◦ **External circulation pump**

Connect the external circulation pump (GP10) to terminal block X4:9 (PE), X4:10 (N) and X4:11 (230 V) on the base board (AA2) as illustrated.

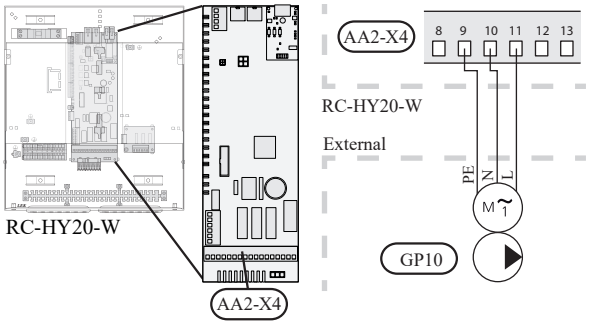

◦ **AUX inputs**

Other external inputs are available on the port 11 through 18 on X2 terminal on RC-HY20-W.

AUX1, 2, 3, 4, 5, and 6 correspond to the port 11, 12, 13, 15, 16 and 17 respectively. Port 14 and 18 are GND and are common to the all auxiliary circuit. Connect a sensor or switch between AUX and GND with a two-core cable with a minimum cross section of 0.5mm^2.

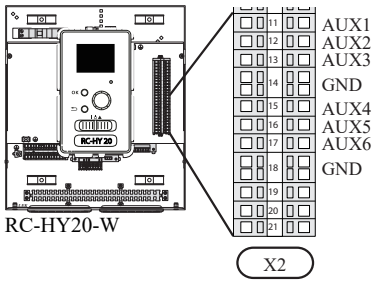

Select the appropriate function in menu 5.4.

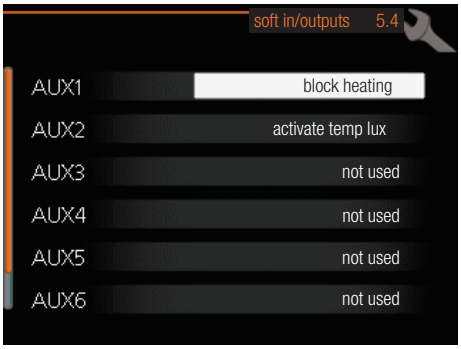

■ Temperature sensor, cooling/heating (BT74)

Additional room sensor (BT74) is applied in case user wants to determine the operation mode (cooling/heating) with a temperature in a particular room.

This option can be chosen only in case cooling function is available.

■ Temperature sensor, external return line (BT71)

Temperature sensor BT71 is applied in case additional heater is placed after 3-way valve (see page 23 for diagram).

■ Temperature sensor, flow line cooling (BT64)

Temperature sensor BT64 is required in case 4-pipe system is used for cooling operation. (see page 23, 24 for diagram)

This option can be chosen only in case cooling function is activated.

■ Contact for external tariff blocking

In cases where external tariff blocking is required it must be connected to terminal block X2.

Tariff blocking means that the additional heat, the compressor, heating and cooling are disconnected by connecting a potential free switch function to the input selected in menu 5.4.

A closed contact results in the electrical output being disconnected.

■ Switch for “SG ready”

NOTE

This function can only be used in mains networks that support the "SG Ready"-standard . "SG Ready" requires two AUX inputs.

This function can only be used in power supply networks that support the “SG Ready” standard. “SG Ready” requires two AUX inputs.

“SG Ready” is a smart tariff management scheme in which electricity supplier can affect indoor and hot water temperature or simply prohibits additional heat and/or the compressor operation in heat pump at certain period of the day. You can choose which operation mode is affected by this function in menu 4.1.5 after the function is activated.

Choose two external input circuits and connect potential-free switches, and set “SG Ready A” and “SG Ready B” in menu 5.4. The system works differently according to the combination of the circuit open/closed.

◦ Blocking (A: Closed, B: Open)

“SG Ready” is active. Compressor operation and additional heat is prohibited.

◦ Normal mode (A: Open, B: Open)

“SG Ready” is not active. No effect on the system.

◦ Low price mode (A: Open, B: Closed)

"SG Ready" is active. The system operates to provide higher capacity than normal mode by using lower tariff electricity. You can select the operation mode (heating/hot water/cooling) affected by this function in menu 4.1.5.

◦ Overcapacity mode (A: Closed, B: Closed)

“SG Ready” is active. The system supplies higher capacity than Low price mode since the electricity price is supposed to be very low in this mode. You can select the operation mode (heating/hot water/cooling) affected by this function in menu 4.1.5.

■Contact for activation of “temporary lux”

Temporary hot water production function “temporary lux” is activated with this signal. Connect the terminals with a potential-free switch and choose the function in menu 5.4.

“Temporary lux” is activated only when the switch is closed.

■Contact for activation of “external adjustment”

Target temperature offset for supply temperature or room temperature can be done with this signal.

When a room sensor is connected and activated, the target room temperature is offset in ℃ if the switch is closed. When a room sensor is not connected, target supply water temperature (heat curve) is offset instead. The degree of offset can be set in menu 5.4.

■Switch for external alarm

Alarms from external devices can be connected to the control and appear as an info alarm. Potential-free signal of NO or NC type can be connected.

■Switch for external blocking

This function is used in case certain operation mode needs to be prohibited. The operation at selected operation mode is prohibited when the switch is closed. Following functions can be managed.

- ◦ Additional heat
- ◦ compressor operation
- ◦ heating mode
- ◦ cooling mode
- ◦ hot water mode

- **AUX outputs**

External output is available on the port 15 to 17 on X4 terminal on AA2 board on RC-HY20-W. The relay output can have a max load of 2A at resistive load.

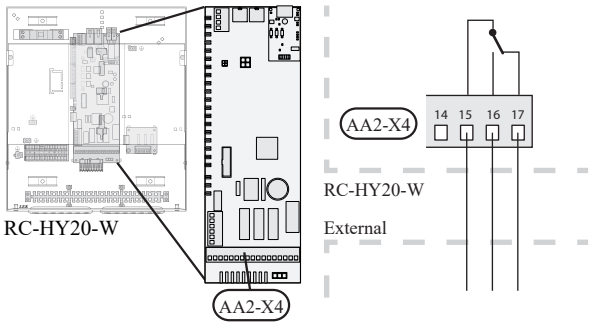

Following functions are available. Select the function in menu 5.4.

◦ Indication of buzzer alarm

When an alarm occurs, the circuit becomes closed between the port 15 and 16. During normal operation, the port 15 and 17 is closed.

◦ Cooling mode indication / Active cooling mode (4-pipe cooling)

When the system turns into cooling mode, the circuit becomes closed between the port 15 and 16. By using this signal, it is possible to switch 3-way valve for 4-pipe cooling or to assemble a display circuit indicating cooling mode. For details of connecting the 3-way valve, refer to page 31.

◦ External pump control (GP10)

External pump (GP10) is used in case additional heater is placed after 3-way valve that switches heating/hot water (refer to page 23 for diagram).

Connect the circulation pump as shown below using the port 15 and 16 on X4 terminal.

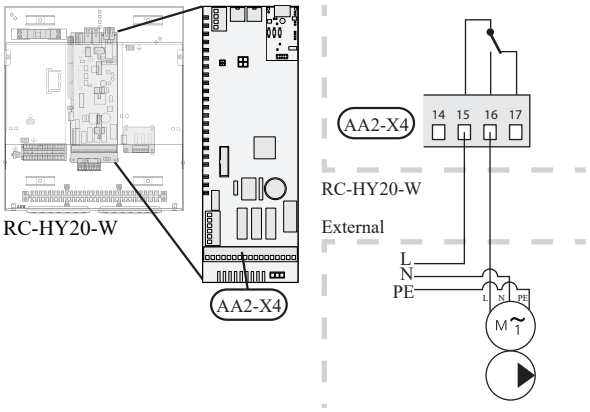

◦ **myUpway™**

Connect the network connected cable (straight, Cat.5e UTP) with RJ45-contact (male) to contact AA4-X9 on the display unit (as illustrated). Use the cable grommet (UB2) in the control module for cable routing.

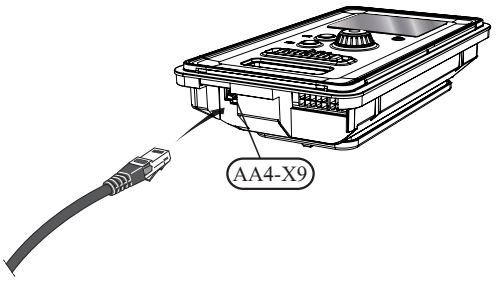

RC-HY40-W

Connection between controller and indoor unit

HSB60-W

Connect the port 1(A), 2(B) and 3(GND) on X4 terminal on AA5 board on RC-HY40-W to the port 1, 2 and 3 on X4 terminal on AA23 board on HSB60-W respectively.

In case several systems are connected to one controller, connect the port 4, 5 and 6 on X4 terminal on AA23 board on HSB60-W close to the controller to the port 1, 2 and 3 on X4 terminal on AA23 board on another HSB.

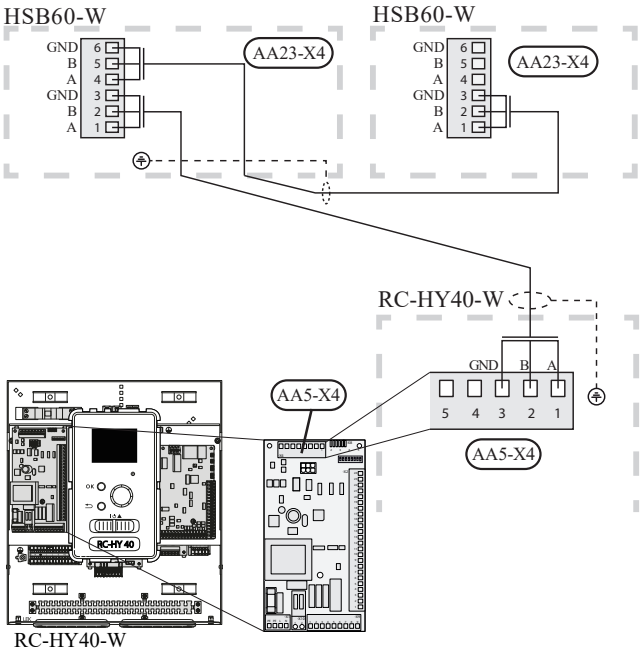

Connection between controller and circulation pump (GP12)

For HSB60-W, circulation pump (GP12) is installed outside of indoor unit. Choose correct terminal according to the type of controller.

Connect the port 5, 6 and 7 on X4 terminal on AA2 board on RC-HY40-W to the port PE, N and L on circulation pump (EB101-GP12) respectively. Control signal cable is connected between the port 7 and 8 on X4 terminal on AA3 board on RC-HY40-W and GND and PWM on circulation pump respectively as shown below.

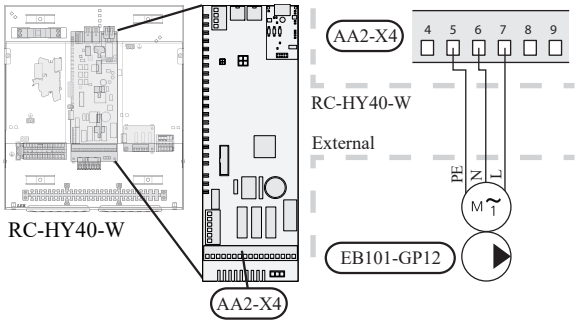

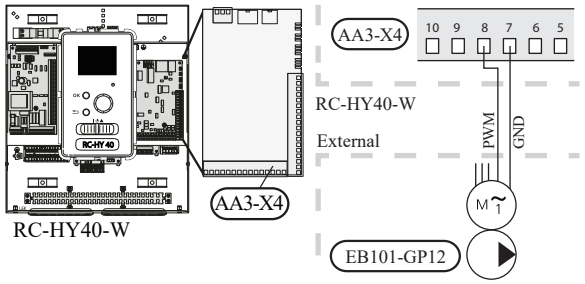

RC-HY40-W can connect and control up to two pumps. Connect the port 12, 13 and 15 on X4 terminal on AA2 board on RC-HY40-W to the port PE, N and L on second circulation pump (EB102-GP12) respectively. Control cable is connected between the port 5 and 6 on X4 terminal on AA3 board on RC-HY40-W and GND and PWM on circulation pump respectively as shown below.

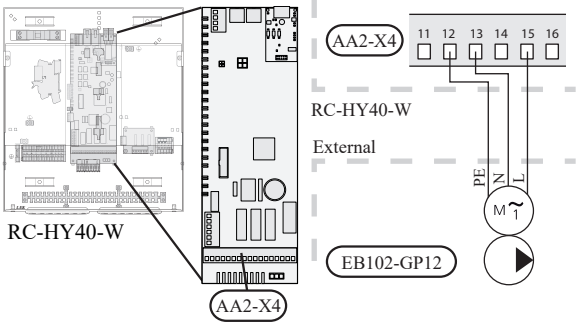

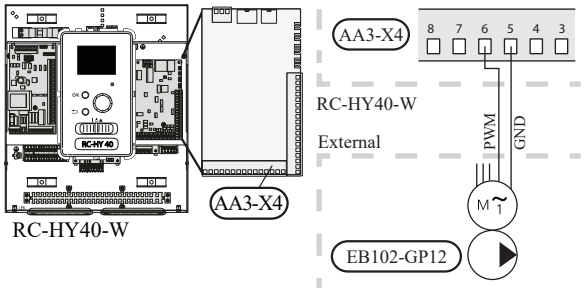

- **3way valve for Heating / Hot water (QN10)**

Refer to 3-way valve connection for HSB60-W with RC-HY20-W (Page 30)

- **3 way valve for Heating / Cooling (QN12)**

QN12 can be controlled with potential free variable relay. Connect L and Control wire on 3-way valve to the port C and NO on X7 terminal on AA3 board on RC-HY40-W respectively. Also, connect L and N wire to power supply as shown below.

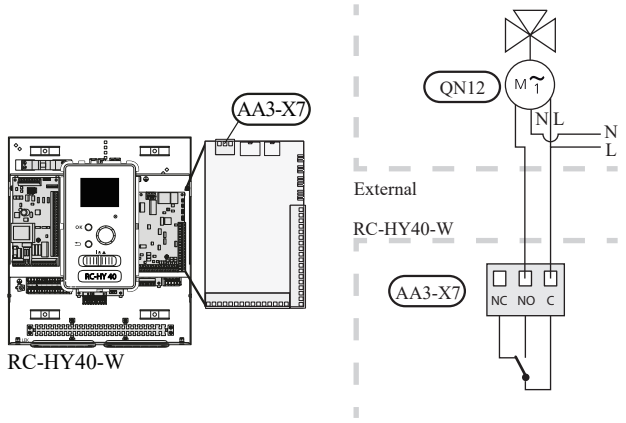

Connection between controller and sensors

Sensor connection is different according to the combination of indoor unit and controller. Refer to the appropriate combination mentioned below.

Use two-core cable with a minimum 0.5mm2 cross section.

Regarding other sensors not mentioned in this chapter, refer to page 38, Optional connections.

- **Ambient air temperature sensor BT1**

Install ambient air temperature sensor (BT1) in the shade on a wall facing north or north-west, so it is unaffected by the morning sun for example.

Connect the sensor to the port 1 and 2 on X6 terminal on AA3 board.

If a conduit is used it must be sealed to prevent condensation in the sensor capsule.

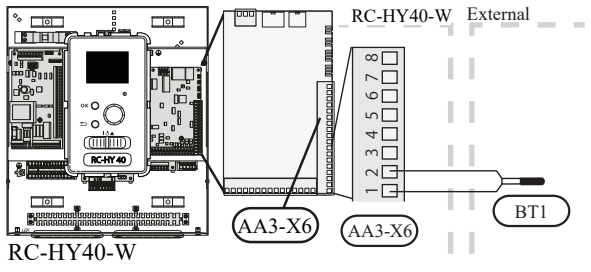

- **Hot water charging sensor BT6 (tank bottom)**

The temperature sensor, hot water charging (BT6) is placed in the submerged tube on the water heater.

Connect the sensor to the port 7 and 8 on X6 terminal on AA3 board.

Hot water charging is activated in menu 5.2 or in the start guide.

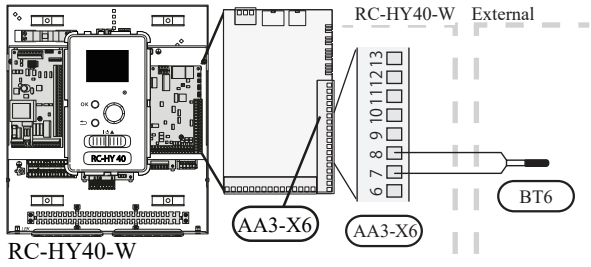

- **Hot water sensor BT7 (tank top)**

A temperature sensor for hot water top (BT7) can be connected to RC-HY40-W to show the water temperature at the top of the tank (if it is possible to install a sensor at the top of the tank).

Connect the sensor to the port 15 and 16 on X6 terminal on AA3 board.

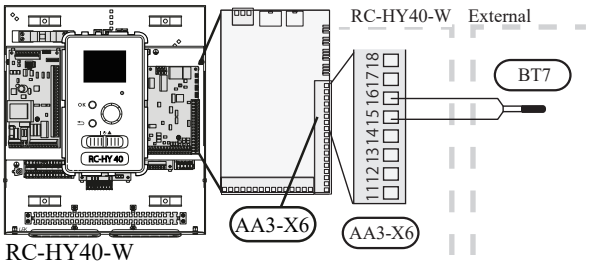

- **Temperature sensor BT63, outlet at additional heater**

This sensor is used in case electric heater is placed before 3 way valve (QN10) for switching heating/ hotwater (see page 22 for diagram).

For connection, see page 39, AUX inputs.

- **Temperature sensor BT25, outlet for heating**

This sensor is used in case electric heater is placed after 3 way valve (QN10) for switching heating/ hot water (see page 23 for diagram).

Connect temperature sensor, external supply line (BT25) to the port 5 and 6 on X6 terminal on AA3 board.

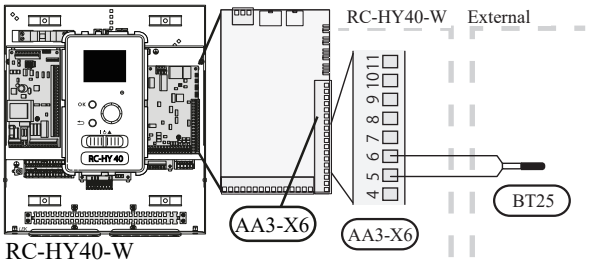

- **Temperature sensor BT71, return line for heating**

This sensor is used in case electric heater is placed after 3 way valve (QN10) for switching heating/ hot water (see page 23 for diagram).

Connect temperature sensor, external return line (BT71) to the port 17 and 18 on X6 terminal on AA3 board.

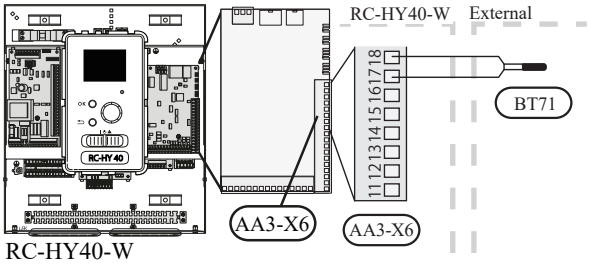

- **Temperature sensor BT64, outlet for cooling**

This sensor is used in case cooling application is required.

For connection, see page 39, AUX inputs.

Optional connections

◦ **Load monitor**

In case many power electrical appliances are connected in the property and the electric heater is energised at the same time, there is a risk of tripping the main fuse of the property.

The control module has an integrated load monitor that controls the power steps of the electric heater by disconnecting step by step in the event of overload in a phase. It will be reconnected if other current consumption is reduced.

Connecting current sensors

A current sensor (BE1 - BE3) should be installed on each incoming phase conductor in to the electrical distribution unit to measure the current. This is best done in the electrical distribution unit.

Connect the current sensors to a multi-core cable in an enclosure next to the electrical distribution unit. Use a multi-core cable of at least 0.5 mm² from the enclosure to the heat pump.

Connect the cable to terminal block X4:1 to 4.

X4:1 is the common terminal block for the three current sensors.

Set the size of the property's main fuse in menu 5.1.12.

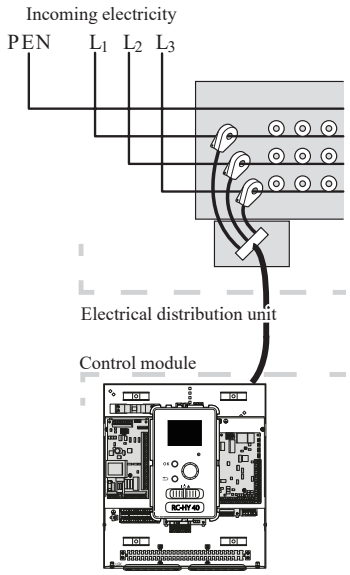

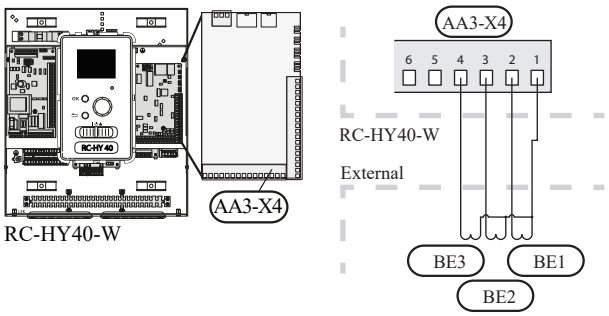

◦ **Room sensor BT50**

Refer to Room sensor BT50 for RC-HY20-W for function and installation place.

Connect the room sensor to terminal block X6:3 and X6:4 on the input board (AA3).

If the sensor is to be used to change the room temperature in °C and/or to change/stabilise the room temperature, the sensor must be activated in menu 1.9.4.

If the room sensor is used in a room with underfloor heating, it should only have an indicatory function, not control of the room temperature.

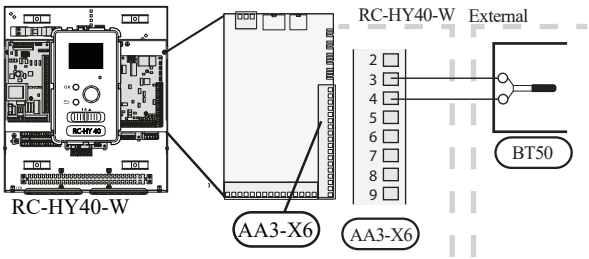

CAUTION

Changes of temperature in accommodation take time. For example, short time periods in combination with underfloor heating will not give a noticeable difference in room temperature.

- **Step controlled additional heat**

  Refer to the explanation for RC-HY20-W (Page 33).

- **Relay output for emergency mode**

  Refer to the explanation for RC-HY20-W (Page 33).

- **External circulation pump**

  Refer to the explanation for RC-HY20-W (Page 34).

◦ **AUX inputs**

Up to 6 other external inputs are available on RC-HY40-W.

AUX1 through 3 correspond to the port 9/10, 11/12, 13/14 respectively on X6 terminal on AA3 board. AUX4 through 6 correspond to the port 1, 2 and 3 on X2 terminal on RC-HY40-W. Port 4 on X2 terminal is GND and is common to AUX4 through 6. Connect a sensor or switch between AUX and GND with a two-core cable with a minimum cross section of 0.5mm^2.

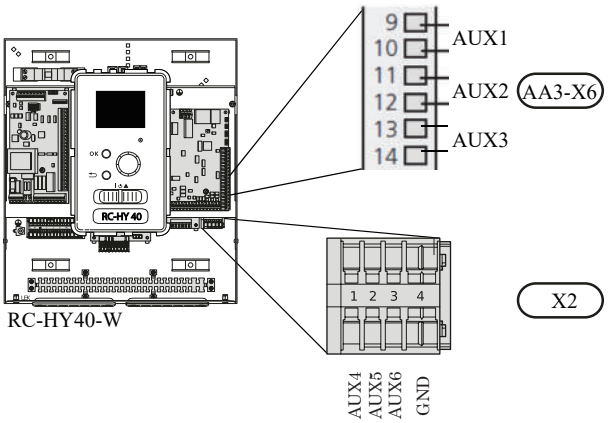

Select the appropriate function in menu 5.4.

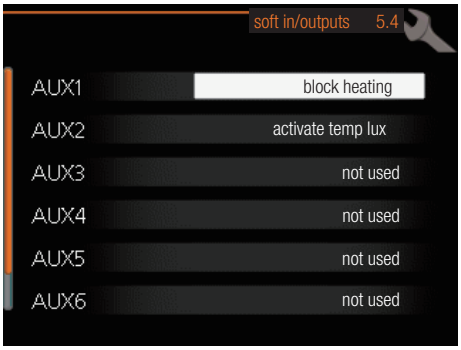

The following functions are available. For details, see AUX inputs for RC-HY20-W (Page 34)

- Temperature sensor, external supply at additional heat before reversing valve (BT63)
- Temperature sensor, cooling/heating (BT74)
- Temperature sensor, flow line cooling (BT64)
- Temperature sensor, boiler (BT52)
- Contact for external tariff blocking
- Switch for “SG ready”
- Contact for activation of “temporary lux”
- Contact for activation of “external adjustment”
- Switch for external alarm
- Switch for external blocking

◦ **AUX outputs**

External output is available on the port NC, NO and C on X7 terminal on AA3 board on RC-HY40-W. The relay output can have a max load of 2A at resistive load.

Following functions are available. Select the function in menu 5.4.

◦ Indication of buzzer alarm

When an alarm occurs, the circuit becomes closed between the port NO and C. During normal operation, the port NC and C is closed.

◦ Cooling mode indication / Active cooling mode (4-pipe cooling)

When the system turns into cooling mode, the circuit becomes closed between the port NO and C. By using this signal, it is possible to switch 3-way valve for 4-pipe cooling or to assemble a display circuit indicating cooling mode. For details of connecting the 3-way valve, refer to page 37.

◦ External pump control (GP10)

External pump (GP10) is used in case additional heater is placed after 3-way valve that switches heating/hot water (refer to page 23 for diagram).

Connect the circulation pump using the port NO and C on X7 terminal on AA3 board as shown below.

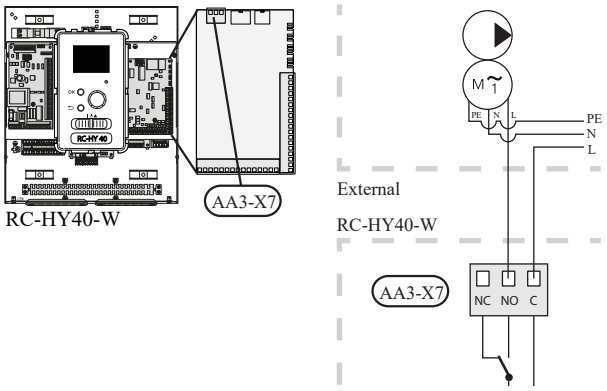

◦ **myUpway™**

Connect the network connected cable (straight, Cat.5e UTP) with RJ45-contact (male) to contact AA4-X9 on the display unit (as illustrated). Use the cable grommet (UB2) in the control module for cable routing.

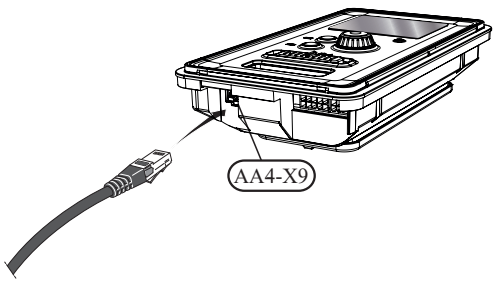

Commissioning and adjusting

Preparations

Before starting commissioning, check the followings;

- The signal cable is connected between indoor unit and outdoor unit as well as indoor unit and controller according to the instruction.
- The power cable is connected to indoor unit, outdoor unit and controller according to the instruction.
- Operation switch in controller is in the position ⏻.
- The service valves on outdoor unit (QM35 and QM36) are open.
- Drain valve is closed before filling water in the system.
- Temperature limiter and electrical switch are not tripped.
- The system is filled with water and well vented.
- There are no leaks on the water pipe.

Filling and venting

Hot water tank

1. Open the hot water tap as well as venting valve if applicable, and then open the cold water cut-off valve at the inlet.
2. Fill the storage tank until obtaining uniform water outflow at the hot water tap, and then close the hot water tap and venting valve.
3. Fill the water heater coil in the tank. See Climate system for details.

After the installation and levelling the tank, follow the procedure below (for the connector pipe symbols, refer to page 15):

1. Remove protecting plugs from the connector pipes
2. Connect the hot water intake line (N).
3. Connect the cold water supply line together with the required safety valves (G).
4. If the system has the hot water circulati on system, connect it to the connector pipe (L). Otherwise, plug the pipe.
5. Connect the supply (J) and return (H) of the heating medium to the coil.

CAUTION

If there is an electric heating module installed in the storage tank, fill the tank with water before connecting it to the electrical installation.

CAUTION

Open the hot water intake valves before heating the system up for the first time or after a longer break in its operation in order to check whether the storage tank is filled with water and the cut-off valve at the cold water inlet is not closed.

Climate system

1. Open the vent at the top of the heating system.
2. Open all shut-off valves, where installed, so that water flows into all circuits.
3. Open the valve for filling the heating circuit and fill it with water.
4. Close the vent when water comes out continuously without bubbles.
5. Check the manometer and close the filling valve when the pressure reaches the required value (2 bar is recommended).
6. Start the circulation pump of the heating system, and open the vent from time to time and release the all remaining air in the heating system.
7. Open safety valve until the pressure of the heating system drops down to about 1 bar. If the pressure drops below 1 bar during venting, add additional water in the circuit.

Inspection of installation

Current regulations require that the climate system is inspected before it is commissioned. The inspection must be carried out by a suitably qualified person and must be documented. Do not replace any part of the system without carrying out new checks.

Start-up and inspection

Before start-up

1 In case of cascade connection, check if each indoor unit has a unique address. See Cascade connection setting on page 29 for details.

2. Start commissioning by the following steps.

Commissioning with heat pump

Start guide is shown on the display on the controller when it is turned ON for the first time. Follow the start guide in the display, or choose menu 5.7 to show the start guide. For details, see Start guide on page 42.

Commissioning with additional heater only

Follow the start guide in the display as same as commissioning with heat pump, and then follow the list below.

1. Go to menu 4.2 op. mode.
2. Mark ”add. heat only” using the control knob and then press the OK button.
3. Return to the main menus by pressing the Back button.

CAUTION

When commissioning without MHI air/water heat pump an alarm communication error may appear in the display.

The alarm is reset if the relevant heat pump is deactivated in menu 5.2.2 ("installed heat pump").

3-way valve operation check

1. Activate "AA2-K1 (QN10)" in menu 5.6.
2. Check that the reversing valve opens or is open for hot water charging.
3. Deactivate "AA2-K1 (QN10)" in menu 5.6.

AUX function check

To check any function connected to the AUX socket,

1. Activate “AA2-X4 (RC-HY20-W)” or “AA3-X7 (RC-HY40-W)” in menu 5.6.
2. Check the desired function.
3. Deactivate “AA2-X4 (RC-HY20-W)” or “AA3-X7 (RC-HY40-W)” in menu 5.6.

Cooling mode

In case the climate system contains a cooling circuit, activate cooling function in menu 5.11.1.1. After that, you can choose cooling mode indication in menu 5.4 for the AUX output.

Cleaning particle filter

Clean the particle filter (HQ1) after installation.

1. Close valve QM31 and the valve by the particle filter (HQ1).
2. Open the safety valve (QM20) to ensure that the pressure in HSB60-W drops.
3. Clean the particle filter (HQ1) as illustrated.

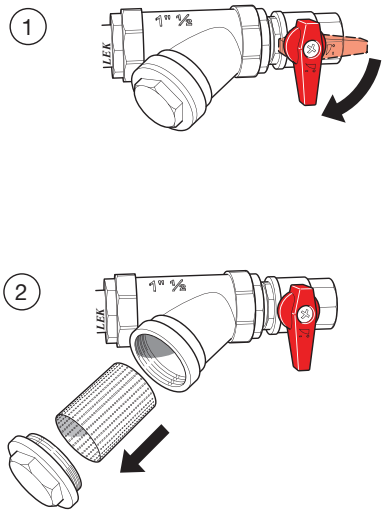

Secondary adjustment

Air is initially released from the hot water and venting may be necessary. If bubbling sounds can be heard from the heat pump, the circulation pump and radiators the entire system will require further venting. When the system is stable (correct pressure and all air eliminated) the automatic heating control system can be set as required

Start guide

NOTE

Fill in the climate system with water before the switch is set to "|"

1. Set the control module's switch to "|".
2. Follow the instructions in the start guide in the control module display. If the start guide does not start when you start the control module, start it manually in menu 5.7.

TIP

See page 52 for a more in-depth introduction to the installation's control system (operation, menus etc.).

Commissioning

The start guide is displayed when installation is started, It describes what needs to carry out at the first start together with basic settings during installation.

The start guide is displayed so that it cannot be bypassed in order to carry out the start-up correctly. You can start the start guide later in menu 5.7.

During the start-up guide, reversing valves and the shunt are run back and forth to help vent the heat pump.

CAUTION

As long as the start guide is active, no function in the heat pump will start automatically.

Each time the controller is ON, the guide will appear until it is completed on the last page.

Operation in the start guide

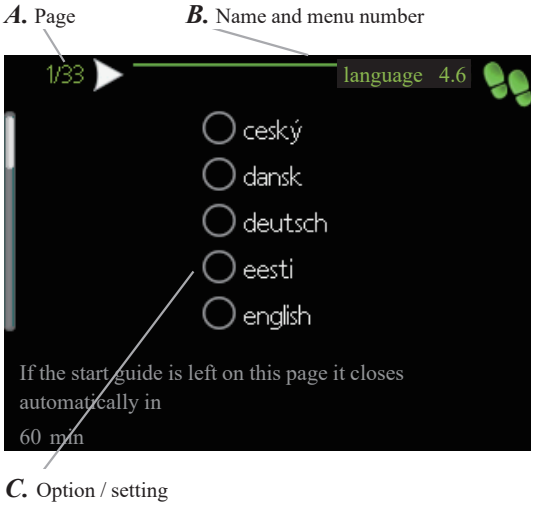

A. Page

You can see the current page of the start guide.

Scroll between the pages of the start guide as follows:

1. Turn the control knob until the arrow is marked in the top left corner (at the page number).
2. Press OK button to proceed to the next page in the start guide.

B. Name and menu number

You can see the menu name of this page. The number refers to the menu number in the control system.

To read more about affected menus, see the help menu or read the user manual.

C. Option / setting

Make settings for the system here.

D. Help menu

In many menus there is a symbol indicating that extra help is available.

To access the help text:

1. Use the control knob to select the help symbol.
2. Press OK button.

The help text often consists of several windows that you can scroll between using the control knob.

Start guide - RC-HY20-W

This menu is shown at the first time that the heat pump is started. It ensures that commissioning is carried out correctly and all necessary steps are followed.

The following menus are basic settings. If accessories are connected other menus will appear.

1/18 - Language

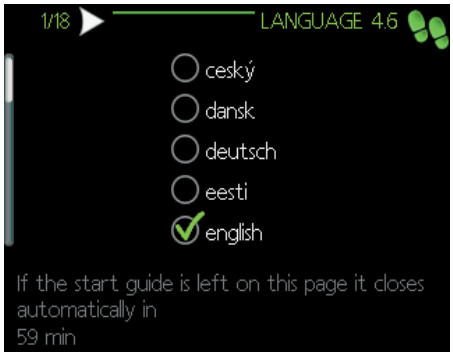

Select the language of the controller.
Factory setting: English
Available languages: Czech, Danish, German, Estonian, English, Spanish, French, Croatian, Icelandic, Italian, Latvian, Lithuatian, Hungarian, Dutch, Norwegian, Polish, Romanian, Russian, Slovenian, Finnish, Swedish, Turkish.

2/18 - Start guide

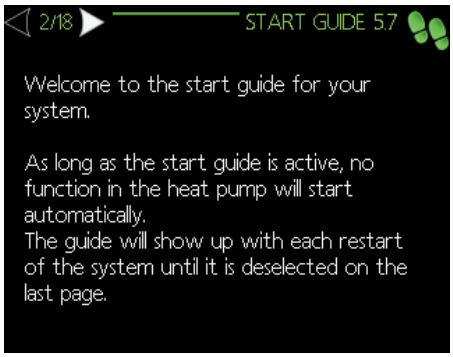

This menu displays information about the start guide.
No action needed.

3/18 - Country

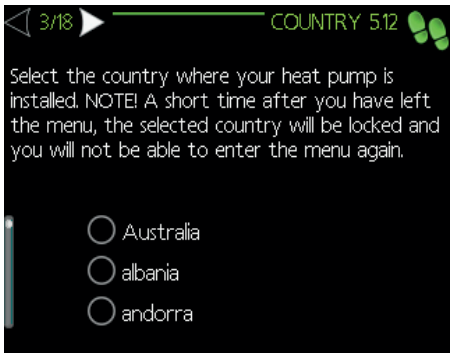

Select the country where your heat pump is located.

4/18 - Flow set. climate sys.

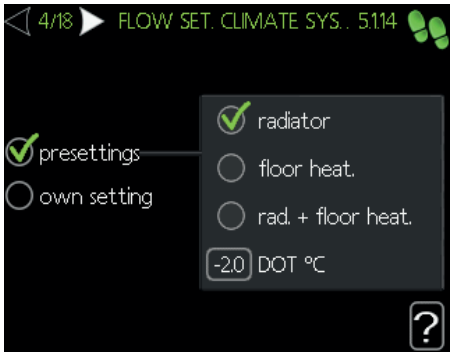

The type of heating distribution system the heating medium pump works towards is set here.
Factory setting: Presettings - Radiator
Setting range:

- **Presettings**
  - Radiator
  - Floor heating
  - Rad. + floor heat
- **Own setting**
  - Setting range dt at DOT: 0.0 - 25.0°C
  - Setting range DOT: -40.0 - 20.0°C

Where dt at DOT is the difference in degrees between the flow and return temperature at dimensioned outdoor temperature.

5/18 - Accessories

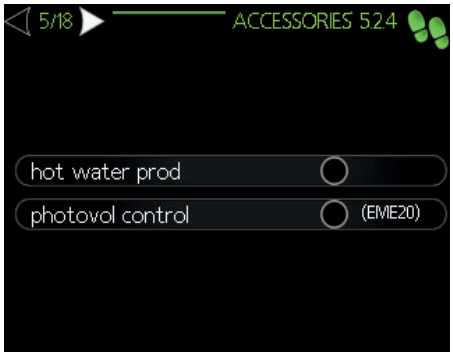

Activate additional connected accessories here.
Setting range: hot water prod, photovol control (EME20)

6/18 - Soft in/outputs

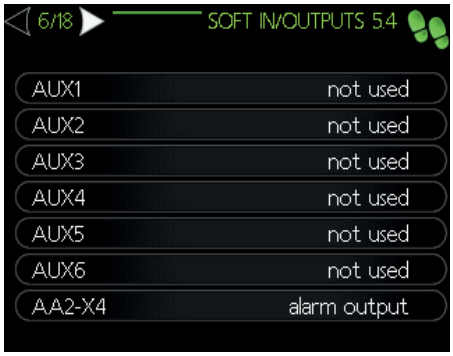

Set the function of each input and output for each terminal (if connected)

Setting range:

- **Aux 1-6**
  - Temperature sensor, cooling/heating (BT74)
  - Temperature sensor, external return line (BT71)
  - Temperature sensor, flow line cooling (BT64)
  - Contact for external tariff blocking
  - Switch for "SG Ready"
  - Contact for activaton of "external adjustment"
  - Switch for external alarm
  - Switch for external blocking
- **AA2-X4**
  - Alarm output
  - Cooling mode indication
  - Active cooling 4 pipe
  - External heating medium pump (GP10)
  - Hot water circulation (GP11)

7/18 - Room sensor settings

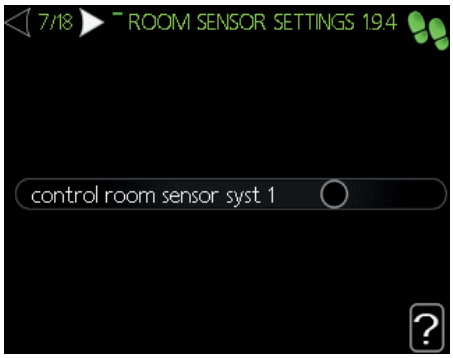

Activate and set the room temperature sensor RTS40M (if connected)

8/18 - Start guide

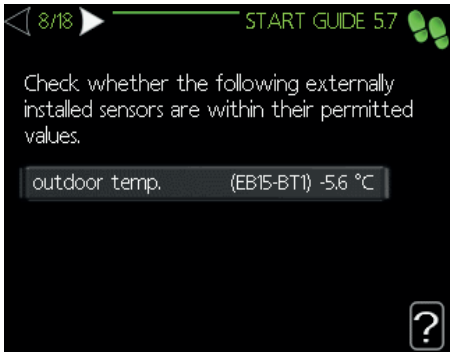

Check if the values of the shown temperature sensors are correct.

9/18 - Addition

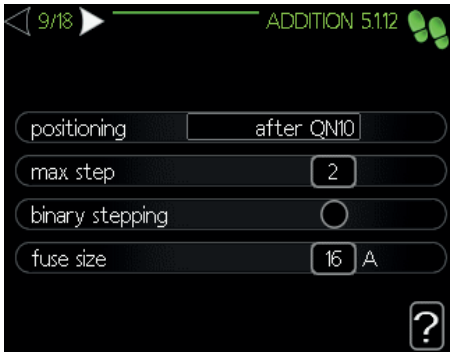

Set addition settings here.

Factory setting:

- **Positioning:** Before QN10
- **Max step:** 3
- **Fuse size:** 16A

Setting range:

- **Positioning:**
  - Before QN10
  - After QN10
- **Max step:**
  - Binary stepping deactivated: 0-3
  - Binary stepping activated: 0-7
- **Fuse size:** 11-200A

10/18 - Installed heat pump

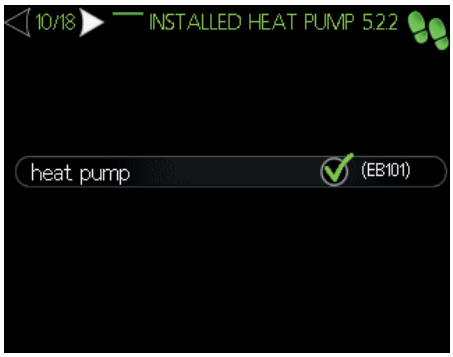

Enable heat pump (EB101) here.

11/18 - Time & date

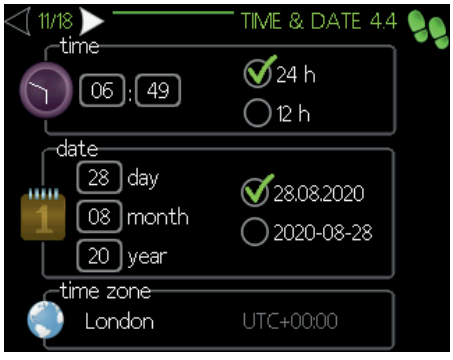

Set time, date and time zone here.

If the system is connected to myUpway then time and date are

set automatically.

12/18 - MIn. flow line temperature

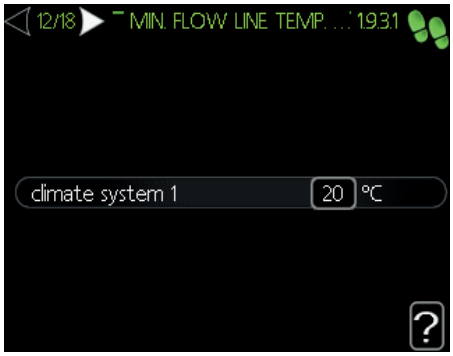

Set the minimum flow line temperature of the climate system.
Factory setting: 20°C
Setting range: 5-70°C

13/18 - Max. flow line temperature

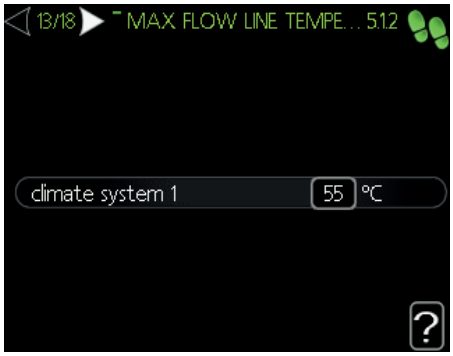

Set the maximum flow line temperature of the climate system.
Factory setting: 60°C
Setting range: 5-70°C

14/18 - Heating curve

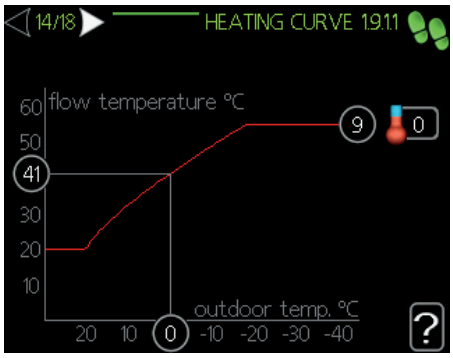

View and set (if desired) the space heating curve.

15/18 - Op. mode

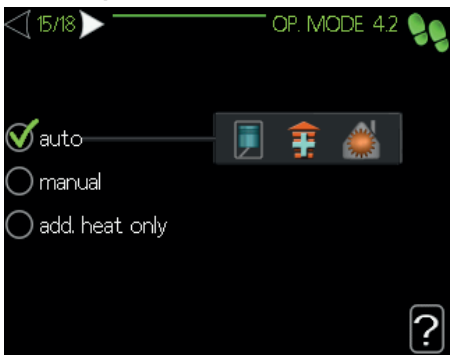

Set the operating mode of the heat pump.
Factory setting: Auto
Setting range:

- **Auto**
- **Manual**
  - Heating
  - Cooling
  - Add. heat only
- **Add. heat only**
  - Heating

16/18 - Alarm actions

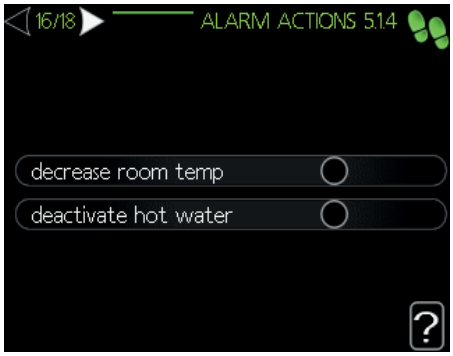

Set how to control the heat pump in case of alarm.

17/18 - Start guide

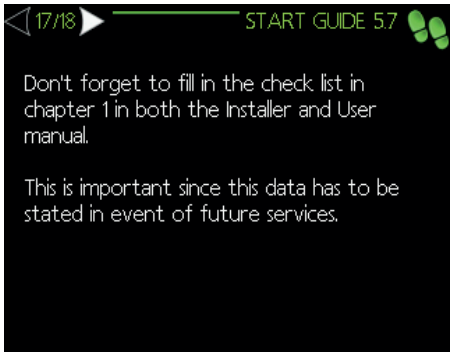

Information message from the controller. No action needed.

18/18 - Start guide

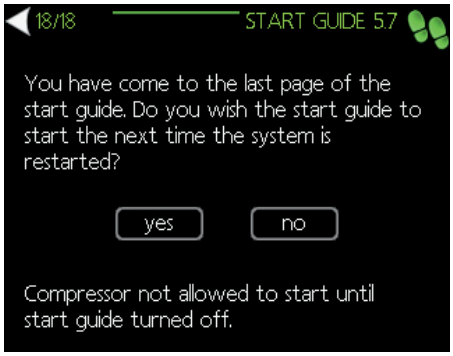

Commissioning guide finishes here. You can set it to open again upon restart of the controller or do not open it anymore.

Start guide - RC-HY40-W

This menu is shown at the first time that the heat pump is started. It ensures that commissioning is carried out correctly and all necessary steps are followed.

The following menus are basic settings. If accessories are connected other menus will appear.

1/19 - Language

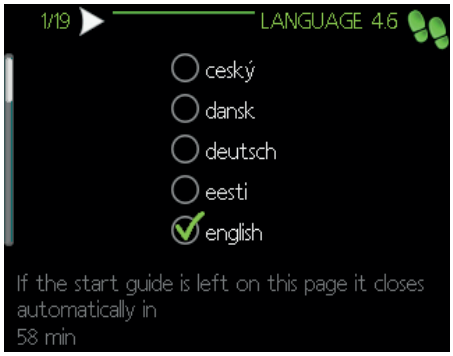

Select the language of the controller.
Factory setting: English
Available languages: Czech, Danish, German, Estonian, English, Spanish, French, Croatian, Icelandic, Italian, Latvian, Lithuatian, Hungarian, Dutch, Norwegian, Polish, Romanian, Russian, Slovenian, Finnish, Swedish, Turkish.

2/19 - Start guide

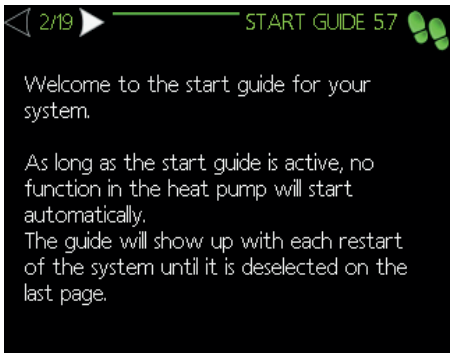

This menu displays information about the start guide.
No action needed.

3/19 - Country

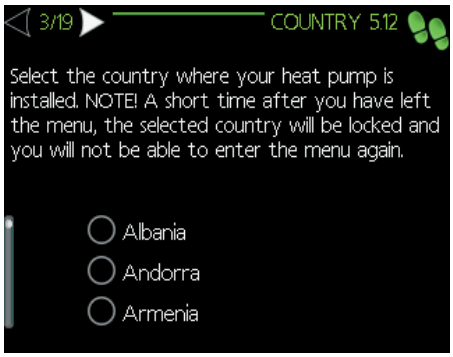

Select the country where your heat pump is located.

4/19 - Flow set. climate sys.

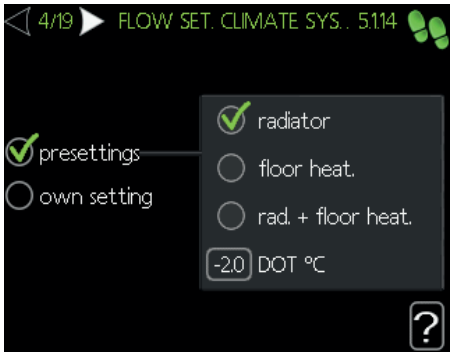

The type of heating distribution system the heating medium pump works towards is set here.
Factory setting: Presettings - Radiator
Setting range:

- **Presettings**
  - Radiator
  - Floor heating
  - Rad. + floor heat
- **Own setting**
  - Setting range dt at DOT: 0.0 - 25.0°C
  - Setting range DOT: -40.0 - 20.0°C

Where dt at DOT is the difference in degrees between the flow and return temperature at dimensioned outdoor temperature.

5/19 - Accessories

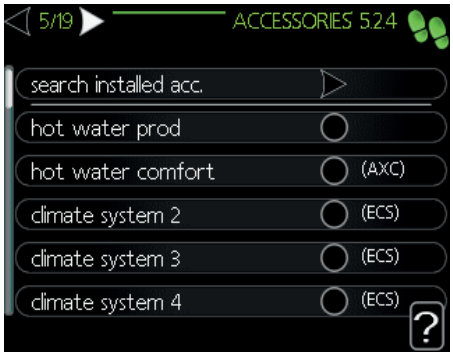

Activate or search for additional connected accessories here.

6/19 - Soft in/outputs

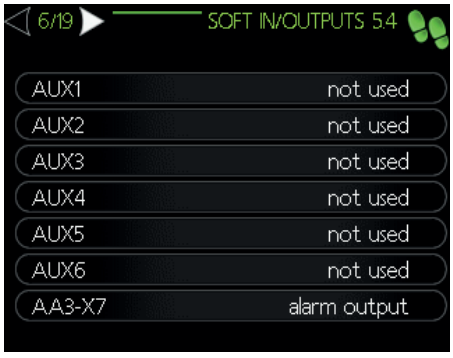

Set the function of each input and output for each terminal (if connected)

Setting range:

- **Aux 1-6**
  - Temperature sensor, cooling/heating (BT74)
  - Temperature sensor, heating supply downstream the submersible heater (BT63)
  - Temperature sensor, flow line cooling (BT64)
  - Temperature sensor, boiler (BT52)
  - Contact for external tariff blocking
  - Switch for "SG Ready"
  - Contact for activaton of "external adjustment"
  - Switch for external alarm
  - Switch for external blocking
- **AA3-X7**
  - Alarm output
  - Cooling mode indication
  - Active cooling 4 pipe
  - External heating medium pump (GP10)
  - Hot water circulation (GP11)

7/19 - Room sensor settings

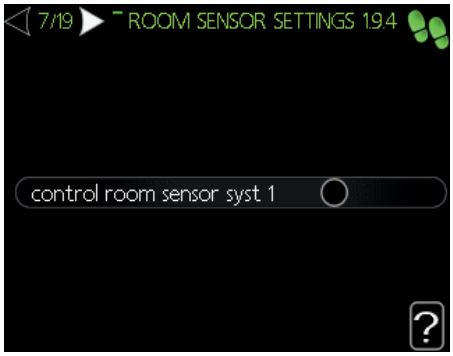

Activate and set the room temperature sensor RTS40M (if connected) for each climate system

8/19 - Start guide

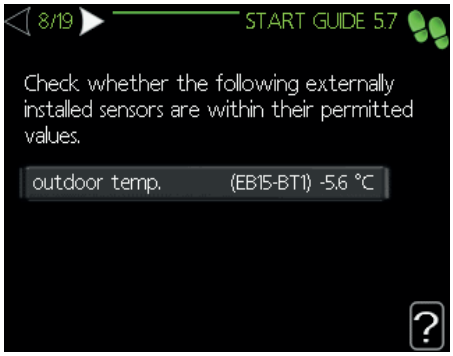

Check if the values of the shown temperature sensors are correct.

9/19 - Addition

Set addition settings here.

Factory setting:

- **Positioning:** Before QN10
- **Max step:** 3
- **Fuse size:** 16A
- **Transformation ration:** 16A

Setting range:

- **Add. tupe:**
  - step controlled
  - shunt controlled
- **Positioning:**
  - Before QN10
  - After QN10
- **Max step:**
  - Binary stepping deactivated: 0-3
  - Binary stepping activated: 0-7
- **Fuse size:** 11-200A
- **Transforamtion ratio:** 300-3000

10/19 - Installed slaves

Search for installed slaves and enable them (if connected) here.

If everything is correct the units are automatically selected after searching for installed slaves.

11/19 - Docking

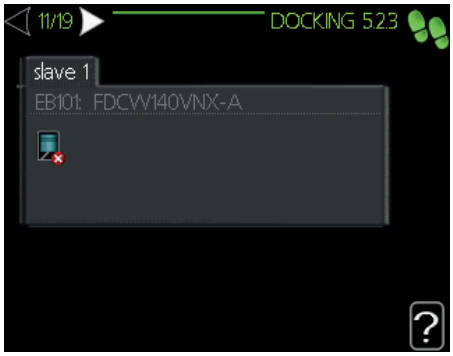

Set docking for each slave (if installed).

12/19 - Time & date

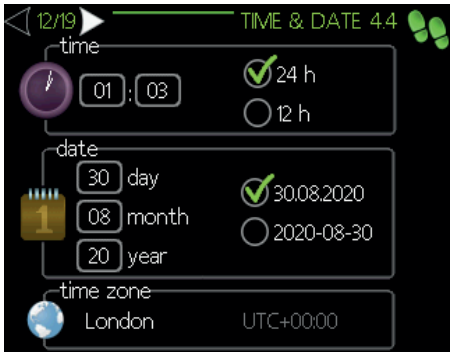

Set time, date and time zone here.

If the system is connected to myUpway then time and date are set automatically.

13/19 - Mln. flow line temperature

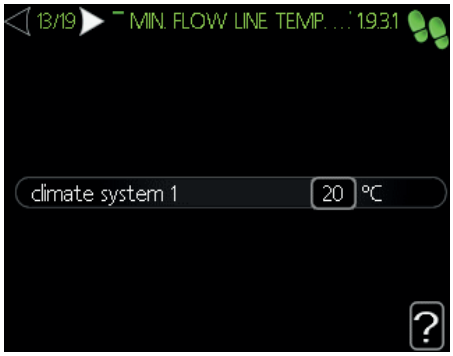

Set the minimum flow line temperature of the climate system.
Factory setting: 20°C
Setting range: 5-70°C

14/19 - Max. flow line temperature

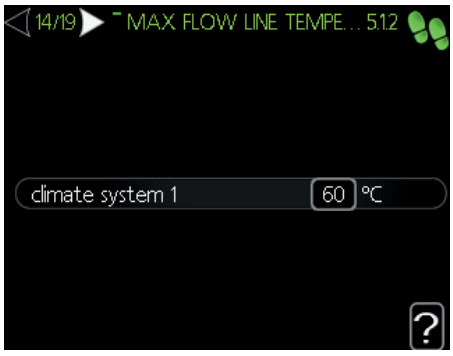

Set the maximum flow line temperature of the climate system.
Factory setting: 60°C
Setting range: 5-70°C

15/19 - Heating curve

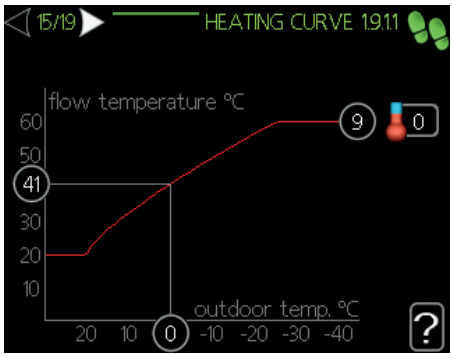

View and set (if desired) the space heating curve.

16/19 - Op. mode

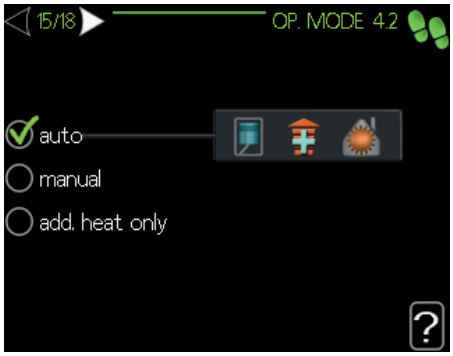

Set the operating mode of the heat pump.
Factory setting: Auto
Setting range:

- **Auto**
- **Manual**
  - Heating
  - Cooling
  - Add. heat only
- **Add. heat only**
  - Heating

17/19 - Alarm actions

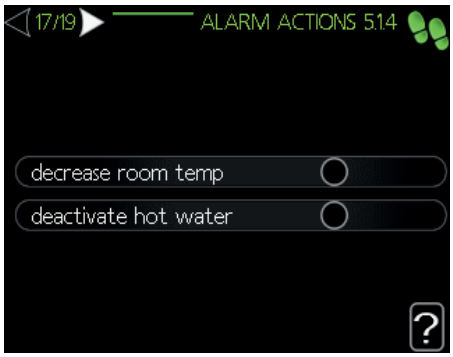

Set how to control the heat pump in case of alarm.

18/19 - Start guide

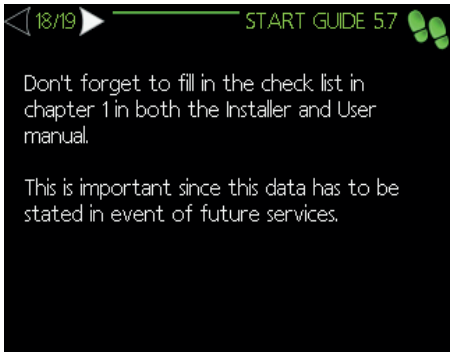

Information message from the controller. No action needed.

19/19 - Start guide

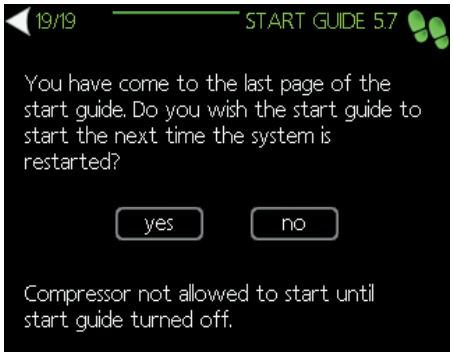

Commissioning guide finishes here. You can set it to open again upon restart of the controller or do not open it anymore.

Heating/cooling curve setting

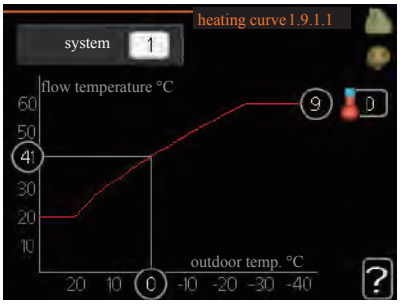

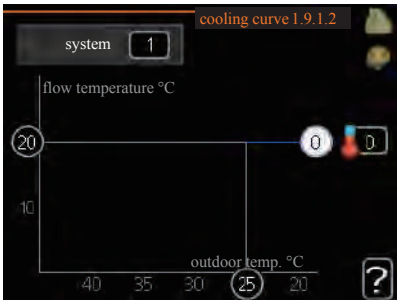

heating curve

Setting range: 0 – 15

Default value: 9

cooling curve (accessory required)

Setting range: 0 – 9

Default value: 0

The prescribed heating curve for your house can be viewed in the menu heating curve . The task of the heating curve is to give an even indoor temperature, regardless of the outdoor temperature, and thereby energy efficient operation. From this heating curve, the control module determines the temperature of the water to the heating system, supply temperature, and there by the indoor temperature. Select the heating curve and read off how the supply temperature changes at different outdoor temperatures here. If there is cooling function, the same settings can be made for the cooling curve.

Curve coefficient

The heating/cooling curve shows the relation between the target supply temperature and the corresponding outdoor temperature. A steep curve indicates that supply temperature becomes higher at low outdoor air temperature in heating and it becomes lower at high outdoor air temperature in cooling.

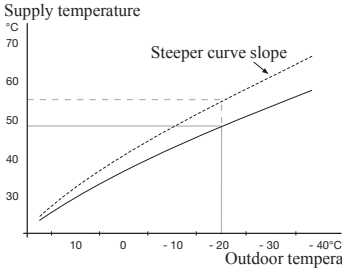

The optimum slope depends on the climate conditions in your location, the type of heating device (radiators or under floor heating) and how well insulated the house is.

The curve is set when the heating installation is installed, but may need adjusting later. Normally, the curve will not need further adjustment.

CAUTION

In the event of making fine adjustments of the indoor temperature, the curve must be offset up or down instead, this is done in menu 1.1 temperature .

Curve offset

The target temperature can be offset in parallel over the entire outdoor temperature range by this function. This is offset by 5 °C by adjusting 2 steps.

The target temperature can be parallel offset in the entire outdoor temperature range with this function. It is offset by 5 °C by adjusting 2 steps.

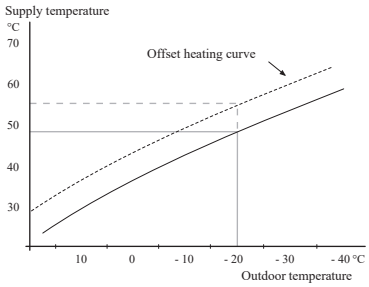

Flow line temperature – maximum and minimum values

This function is used in order to limit max-min supply temperature. The heating / cooling curve becomes flat beyond max / min target temperature.

CAUTION

Underfloor heating systems are normally max flow line temperature set between 35 and 45°C. Take care not to cause low temperature burns in case it is set higher than 35°C.

Must be restricted with underfloor cooling min. flow line temp. to prevent condensation.

Check the max temperature for your floor with your installer/floor supplier.

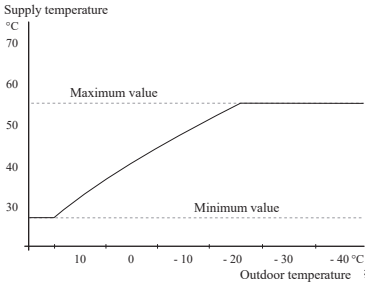

The figure at the end of the curve indicates the curve number. The figure beside the thermometer icon gives the curve offset. Use the control knob to set a new value.

Confirm the new setting by pressing the OK button.

Curve 0 is an own curve created in menu 1.9.7.

To select another curve (slope):

1. Press OK button to access the setting mode
2. Select a new curve. The curves are numbered from 0 to 15, and the bigger number curve has steeper slope.

   Curve 0 means that own curve (menu 1.9.7) is used.
3. Press OK button to exit the setting.

To read off a curve:

1. Turn the control knob so that the ring on the shaft with the outdoor temperature is marked.
2. Press OK button.
3. Follow the grey line up to the curve and out to the left to read off the value for the supply temperature at the selected outdoor temperature.
4. You can now select to take read outs for different outdoor temperatures by turning the control knob to the right or left and read off the corresponding flow temperature.
5. Press OK or Back button to exit read off mode.

TIP

Wait 24 hours before making a new setting, so that the room temperature has time to stabilise.

If it is cold outdoors and the room temperature is too low, increase the curve slope by one increment.

If it is cold outdoors and the room temperature is too high, lower the curve slope by one increment.

If it is warm outdoors and the room temperature is too low, increase the curve offset by one increment.

If it is warm outdoors and the room temperature is too high, lower the curve offset by one increment.

Hot water circulation setting

hot water recirc.

operating time

Setting range: 1 – 60 min

Default value: 60 min

downtime

Setting range: 0 – 60 min

Default value: 0 min

Set the hot water circulation for up to three periods per day here. During the set periods the hot water circulation pump will run according to the settings above.

"operating time" decide how long the hot water circulation pump must run per operating instance.

"downtime" decide how long the hot water circulation pump must be stationary between operating instances.

Hot water circulation is activated in menu 5.4 "soft inputs and outputs".

SG Ready

This function can only be used in mains networks that support the "SG Ready"-standard .

Make settings for the function "SG Ready" here.

Low price mode means that the electricity supplier has a low tariff and the system uses this to reduce costs.

Over capacity mode means that the electricity supplier has set the tariff very low and the system uses this to reduce the costs as much as possible.

affect room temperature

Here you set whether room temperature should be affected when activating "SG Ready".

With low price mode of "SG Ready" the parallel offset of the indoor temperature is increased by "+1". If a room sensor is installed and activated, the desired room temperature increases by 1 °C.

With over capacity mode of "SG Ready" the parallel offset for the indoor temperature is increased by"+2".

If a room sensor is installed and activated, the desired room temperature increases by 2 °C.

affect hot water

Here you set whether the temperature of the hot water should be affected when activating "SG Ready".

With low price mode on "SG Ready" the stop temperature of the hot water is set as high as possible at only compressor operation (immersion heater not permitted).

With over capacity mode of "SG Ready" the hot water is set to "luxury" (immersion heater permitted).

affect cooling (accessory required)

Here you set whether room temperature during cooling operation should be affected when activating "SG Ready".

With low price mode of "SG Ready" and cooling operation the indoor temperature is not affected.

With over capacity mode of "SG Ready" and cooling operation the parallel offset for the indoor temperature is reduced by"-1". If a room sensor is installed and activated, the desired room temperature decreases by 1 °C.

NOTE

The function must be connected to two AUX inputs and activated in menu 5.4.

Control
Display unit

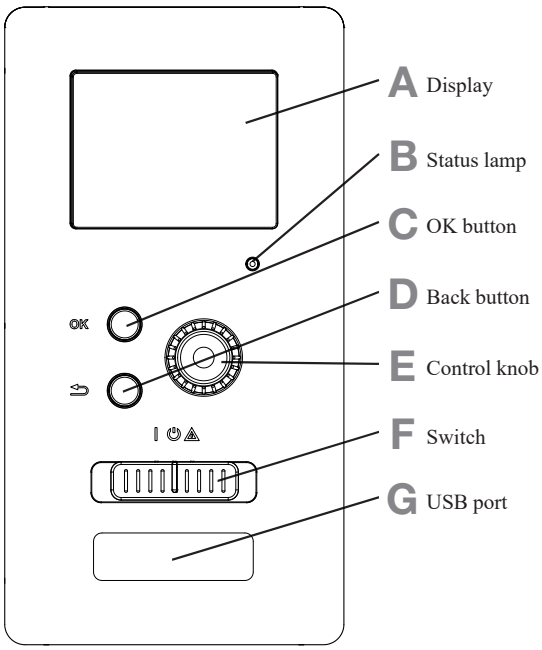

A Display

Instructions, settings and operational information are shown on the display. The easy-to-read display and menu system, make it easy to navigate between various menus and options, set comfort and get the necessary information.

B Status lamp

The status lamp indicates the status of the control module. It:

- lights green during normal operation.
- lights yellow in emergency mode.
- lights red in the event of an alarm.

C OK button

The OK button is used to:

- confirm selections of sub menus/options/set values/page in the start guide.

D Back button

The back button is used to:

- go back to the previous menu.
- change a setting that has not been confirmed.

E Control knob

The control knob can be turned to the right or left. You can:

- scroll in menus and between options.
- increase and decrease values.
- change pages in multiple page instructions (for example help text and service info).

F Switch (SF1)

The switch shows three positions:

- On (|)
- Standby (⏻)
- Emergency mode (⚠)

Emergency mode must only be used in the event of a fault on the control module. In this mode, the compressor in the heat pump is turned off and the immersion heater is activated.

The control module display is not illuminated and the status lamp lights yellow.

G USB port

The USB port is hidden behind the plastic badge of the product name.

The USB port is used to update the software.

Menu system

RC-HY20-W

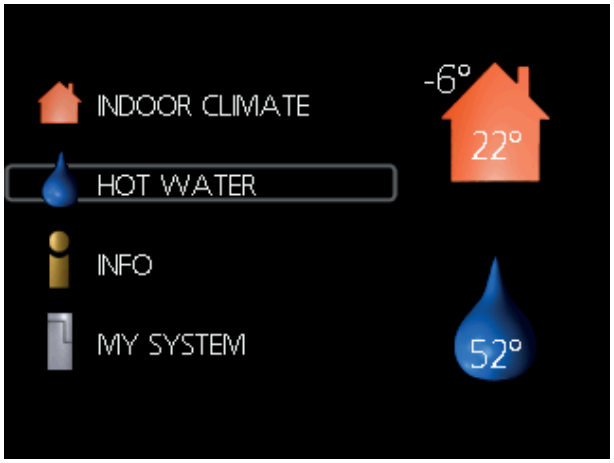

RC-HY40-W

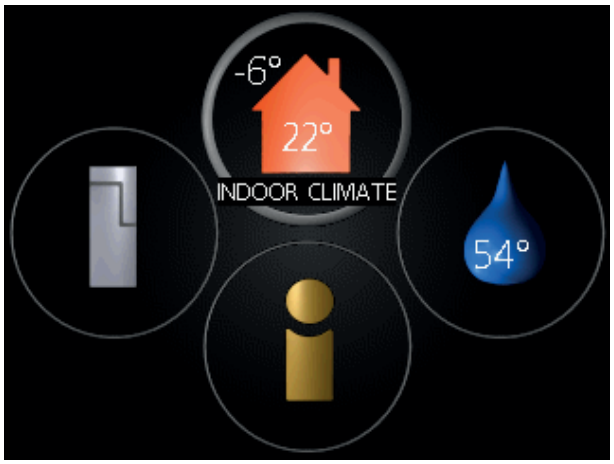

Menu 1 - INDOOR CLIMATE

Setting and scheduling the indoor climate. See information in the help menu or user manual.

Menu 2 - HOT WATER

Setting and scheduling hot water production. See information in the help menu or user manual.

This menu only appears if a water heater is installed in the system.

Menu 3 - INFO

Display of temperature and other operating information and access to the alarm log. See information in the help menu or user manual.

Symbols in the display

The following symbols can appear in the display during operation.

Symbol	Description
	This symbol appears when there is information to be noticed in menu 3.1.
	These two symbols indicate whether the compressor in the outdoor unit or additional heat in the installation is blocked via controller. These functions will be blocked for example, when either of the operation mode is blocked in menu 4.2, when blocking of either function is scheduled in menu 4.9.5, or when an alarm for blocking the operation occurs. Blocking the compressor. Blocking additional heat.
	This symbol appears if periodic increase or lux mode for the hot water is activated.
	This symbol indicates if "holiday setting" is active in menu 4.7.
	This symbol indicates if the controller has contact with myUpway.
	This symbol indicates if cooling is active.

Menu 4 - MY INSTALLATION

Setting time, date, language, display, operating mode etc. See information in the help menu or user manual.

Menu 5 - SERVICE

Advanced settings. These settings are not available to the end user. The menu is made visible by pressing the Back button for 7 seconds in the top screen.

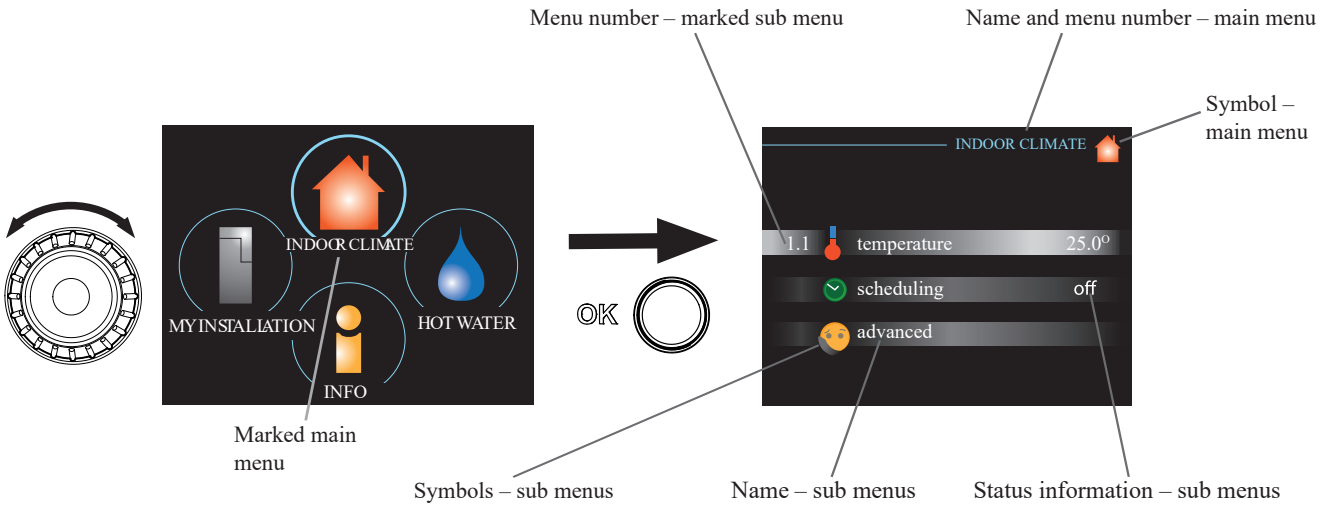

Operation

To move the cursor, turn the control knob to the left or the right. The marked position is brighter and/or has a light frame.

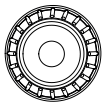

Selecting menu

To advance in the menu system select a main menu by marking it and then pressing the OK button. A new window opens with sub menus.

Select one of the sub menus by marking it and then pressing the OK button.

Selecting options

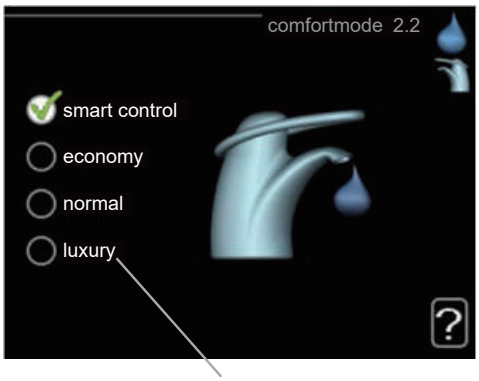

Alternative

In an options menu the current selected option is indicated by a green tick.

To select another option:

1. Mark the applicable option. One of the options is pre-selected (white).

2. Press the OK button to confirm the selected option. The selected option has a green tick.

Setting a value

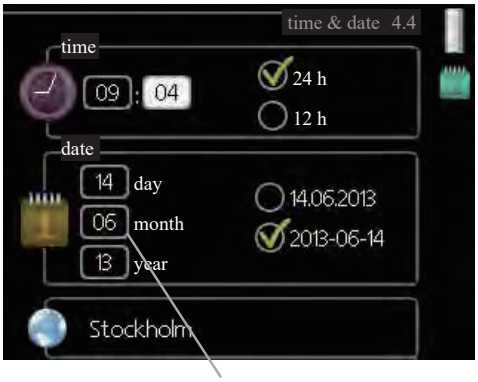

Values to be changed

To set a value:

1. Mark the value you want to set using the control knob.

2. Press the OK button. The background of the value becomes green, which means that you have accessed the setting mode.

3. Turn the control knob to the right to increase the value and to the left to reduce the value.

4. Press the OK button to confirm the value you have set. To change and return to the original value, press the Back button.

Use the virtual keyboard

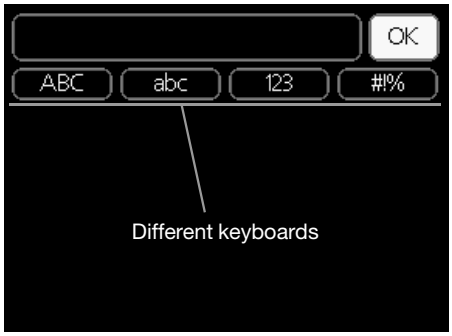

In some menus where text may require entering, a virtual keyboard is available.

Depending on the menu, you can gain access to different character sets which you can select using the control knob. To change character table, press the Back button. If a menu only has one character set, the keyboard is displayed directly.

When you have finished writing, mark "OK" and press the OK button.

Scroll through the windows

A menu can consist of several windows. Turn the control knob to scroll between the windows.

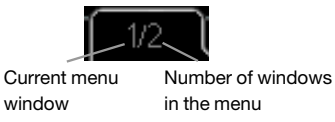

Scroll through the windows in the start guide

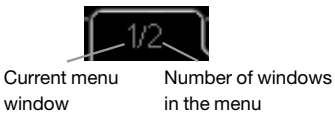

1. Turn the control knob until one of the arrows in the top left corner (at the page number) has been marked.
2. Press the OK button to skip between the steps in the start guide.

Help menu

In many menus there is a symbol that indicates that extra help is available.

To access the help text:

1. Use the control knob to select the help symbol.
2. Press the OK button.

The help text often consists of several windows that you can scroll between using the control knob.

Menu list

"* Accessories are needed. ** Heat pump with cooling function required. 40"

MENU			RC-HY20-W	RC-HY40-W
1 INDOOR CLIMATE				
1.1 - temperature	1.1.1 heating		✔	✔
	1.1.2 cooling **		✔	✔
1.3 - scheduling	1.3.1 heating		✔	✔
	1.3.2 cooling **		✔	✔
1.9 - advanced	1.9.1 curve	1.9.1.1 heating curve	✔	✔
		1.9.1.2 cooling curve **	✔	✔
	1.9.2 external adjustment		✔	✔
	1.9.3 min. flow line temp.	1.9.3.1 heating	✔	✔
		1.9.3.2 cooling **	✔	✔
	1.9.4 room sensor settings		✔	✔
	1.9.5 cooling settings *		✔	✔
	1.9.7 own curve	1.9.7.1 heating	✔	✔
		1.9.7.2 cooling **	✔	✔
	1.9.8 point offset		✔	✔
2 HOTWATER				
2.1 temporary lux			✔	✔
2.2 comfort mode			✔	✔
2.3 scheduling			✔	✔
2.9 advanced	2.9.1 periodic increase		✔	✔
	2.9.2 hot water recirc. *		✔	✔
3 INFO				
3.1 service info			✔	✔
3.2 compressor info			✔	✔
3.3 add. heat info			✔	✔
3.4 alarm log			✔	✔
3.5 indoor temp. log			✔	✔
4. MY SYSTEM				
4.1 plus functions	4.1.1 Pool 1		—	✔
	4.1.2 Pool 2		—	✔
	4.1.3 internet	4.1.3.1 myUpway™	✔	✔
		4.1.3.8 tcp/ip settings	✔	✔
		4.1.3.9 proxy settings	✔	✔
	4.1.5 SG Ready		✔	✔
	4.1.6 smart price adaption™		✔	✔
	4.1.8 smart energy source™	4.1.8.1 settings	—	✔
		4.1.8.2 set. Price	—	✔
		4.1.8.3 CO2 impact	—	✔
		4.1.8.4 tariff periods, electricity	—	✔
		4.1.8.6 tariff per, ext. shunt add	—	✔

"* Accessories are needed. ** Heat pump with cooling function required. 40"

MENU			RC-HY20-W	RC-HY40-W
		4.1.8.7 tariff per, ext. step add	—	✔
	4.1.10 Solar electricity		✔	✔
4.2 op. mode			✔	✔
4.3 my icons			✔	✔
4.4 time & date			✔	✔
4.6 language			✔	✔
4.7 holiday setting			✔	✔
4.9 advanced	4.9.1 op. prioritisation		✔	✔
	4.9.2 auto mode setting		✔	✔
	4.9.3 degree minute setting		✔	✔
	4.9.4 factory setting user		✔	✔
	4.9.5 schedule blocking		✔	✔
	4.9.6 schedule silent mode		✔	✔
5 SERVICE				
5.1 operating settings	5.1.1 hot water settings *		✔	✔
	5.1.2 max flow line temperature		✔	✔
	5.1.3 max diff flow line temp.		✔	✔
	5.1.4 alarm actions		✔	✔
	5.1.12 addition		✔	✔
	5.1.14 flow set. climate system		✔	✔
	5.1.22 heat pump testing		✔	✔
	5.1.23 compressor curve		✔	✔
5.2 system settings	5.2.2 installed slaves		✔	✔
	5.2.3 docking		✔	✔
	5.2.4 accessories		✔	✔
5.3 accessory settings	5.3.2 shunt controlled add. heat *		—	✔
	5.3.3 extra climate system *		—	✔
	5.3.4 solar heating *		—	✔
	5.3.6 step controlled add. heat		—	✔
	5.3.8 hot water comfort *		—	✔
	5.3.10 modbus *		—	✔
	5.3.20 flow sensor*		—	✔
5.4 soft in/outputs			✔	✔
5.5 factory setting service			✔	✔
5.6 forced control			✔	✔
5.7 start guide			✔	✔
5.8 quick start			✔	✔
5.9 floor drying function			✔	✔
5.10 change log			✔	✔

"* Accessories are needed. ** Heat pump with cooling function required. 40"

MENU			RC-HY20-W	RC-HY40-W
5.11 slave settings	5.11.1 EB101	5.11.1.1 heat pump	✔	✔
		5.11.1.2 charge pump (GP12)	✔	✔
	5.11.2 EB102		—	✔
	5.11.3 EB103		—	✔
	5.11.4 EB104		—	✔
	5.11.5 EB105		—	✔
	5.11.6 EB106		—	✔
	5.11.7 EB107		—	✔
	5.11.8 EB108		—	✔
5.12 country			✔	✔

Sub-menus

Menu SERVICE has orange text and is intended for the advanced user. This menu has several sub-menus.

Status information for the relevant menu can be found on the display to the right of the menus.

operating settings: Operating settings for the control module.

system settings: System settings for the control module, activating accessories etc.

soft in/outputs: Setting software controlled in and

outputs on the input card (AA3) and terminal block (X2).

factory setting service: Total reset of all settings (including settings available to the user) to default values.

forced control: Forced control of the different components in the indoor module.

start guide: Manual start of the start guide which is run the first time when the control module is started.

quick start: Quick starting the compressor.

NOTE

Incorrect settings in the service menus can damage the installation.

Menu 5.1 - operating settings

Operating settings can be made for the control module in the sub menus.

Menu 5.1.1 - hot water settings

economy

Setting range start temp. economy: 5 – 55 °C
Factory setting start temp. economy: 42 °C
Setting range stop temp. economy: 5 – 60 °C
Factory setting stop temp. economy: 48 °C

normal

Setting range start temp. normal: 5 – 60 °C
Factory setting start temp. normal: 46 °C
Setting range stop temp. normal: 5 – 65 °C
Factory setting stop temp. normal: 50 °C

luxury

Setting range start temp. lux: 5 – 70 °C
Factory setting start temp. lux: 49 °C
Setting range stop temp. lux: 5 – 70 °C
Factory setting stop temp. lux: 53 °C

stop temp. per. increase

Setting range: 55 – 70 °C
Factory setting: 55 °C

charge method

Setting range: target temp, delta temp
Default value: delta temp

Here you set the start and stop temperature of the hot water for the different comfort options in menu 2.2 as well as the stop temperature for periodic increase in menu 2.9.1.

The charge method for hot water mode is selected here. "delta temp" is recommended for heaters with charge coil, "target temp" for heaters with domestic coil.

Menu 5.1.2 - max flow line temperature

climate system

Setting range: 5 – 70 °C
Default value: 60 °C

Set the maximum supply temperature for the climate system here. If the installation has more than one climate system, individual maximum supply temperatures can be set for each system. Climate systems 2 – 8 cannot be set to a higher max supply temperature than climate system 1.

CAUTION

Underfloor heating systems are normally max flow line temperature set between 35 and 45°C.

Be careful not to cause low temperature burn if it is set at 35°C or higher.

Check the max floor temperature with your floor supplier.

Menu 5.1.3 - max diff flow line temp.

max diff compressor

Setting range: 1 – 25 °C
Default value: 10 °C

max diff addition

Setting range: 1 – 24 °C
Default value: 7 °C

Here you set the maximum permitted difference between the calculated and actual supply temperature during compressor mode and add. heat mode. Max diff. additional heat can never exceed max diff. compressor

max diff compressor

When the current supply temperature **deviates** from the set value compared to that calculated, the heat pump is forced to stop irrespective of the degreeminute value.

If the current supply temperature exceeds the calculated flow temperature plus the set value, the degree minute value is set to 0. The compressor in the heat pump stops when there is only a heating demand.

max diff addition

If "addition" is selected and activated in menu 4.2 and the present supply temp exceeds the calculated temperature plus the set value, the additional heat is forced to stop.

Menu 5.1.4 - alarm actions

Select how to control the heat pump in the event of an alarm. You can choose to stop producing hot water and/or reduce the room temperature.

CAUTION

If no alarm action is selected, it can result in higher energy consumption in the event of an alarm.

Menu 5.1.12 - addition

add type: step controlled

max step

Setting range (binary stepping deactivated): 0 – 3
Setting range (binary stepping activated): 0 – 7
Default value: 3

fuse size

Setting range: 1 – 200 A
Factory setting: 16 A

You can set the maximum number of permitted additional heat steps, if there is internal additional heat in the tank (only accessible if the additional heat is positioned after QN10), whether binary stepping is to be used and the size of the fuse.

<Add. Type: shunt controlled (RC-HY40-W only)>

prioritised additional heat

Setting range: on/off
Factory setting: off

minimum running time

Setting range: 0 – 48 h
Default value: 12 h

min temp.

Setting range: 5 – 90 °C
Default value: 55 °C

mixing valve amplifier

Setting range: 0.1 –10.0
Default value: 1.0

mixing valve step delay

Setting range: 10 – 300 s
Default values: 30 s

fuse size

Setting range: 1 – 200 A
Factory setting: 16 A

transformation ratio

Setting range: 300 – 3000
Factory setting: 300

Select this option if shunt controlled additional heat is connected.

Set when the addition is to start, the minimum run time and the minimum temperature for external addition with shunt here. External addition with shunt is for example a wood/oil/gas/pellet boiler.

You can set shunt valve amplification and shunt valve waiting time.

Selecting "prioritised additional heat" uses the heat from the external additional heat instead of the heat pump.

The shunt valve is regulated as long as heat is available, otherwise the shunt valve is closed.

TIP

See the accessory installation instructions for function description.

Menu 5.1.14 - flow set. climate system

presettings

Setting range: radiator, floor heat., rad. + floor heat.
Default value: radiator
Setting range DOT: -40.0 – 20.0 °C

The factory setting of DOT value depends on the country that has been given for the product's location.
The example below refers to Sweden.

Factory setting DOT: -20.0 °C

own setting

Setting range dT at DOT: 0.0 – 25.0

Factory setting dT at DOT: 10.0
Setting range DOT: -40.0 – 20.0 °C
Factory setting DOT: -20.0 °C

Select the type of heating distribution system.

dT at DOT is the difference in degrees between flow and return temperatures at dimensioned outdoor temperature.

Menu 5.1.22 - heat pump testing

NOTE

This menu is intended for testing heat pump according to different standards.

Use of this menu for other reasons may result in your installation not functioning as intended.

This menu contains several sub-menus, one for each standard.

Menu 5.1.23 - compressor curve

Set whether the compressor in the heat pump should work to a particular curve under specific requirements or if it should work to predefined curves.

You can set a curve for each operation mode (heat, hot water, coolingetc.) by unticking "auto", turning the control knob until a temperature is marked and pressing OK. You can set at what temperature max- min frequencies will occur.

This menu consists of several windows (one for each operation mode). Use the navigation arrow in the top left corner to change between the windows.

Menu 5.2 - system settings

Make different system settings for your installation here, e.g. activate the connected heat pump and which accessories are installed.

Menu 5.2.2 - installed heat pump

If a heat pump is connected to the master installation, set it here.

For RC-HY40-W, you can set slave unit to be connected.

There are two ways of activating connected slaves. You can either mark the alternative in the list or use the automatic function "search installed slaves".

search installed slaves

Mark “search installed slaves" and press the OK button to automatically find connected slaves for the master heat pump.

Menu 5.2.3 – docking (RC-HY40-W only)

Enter how your system is docked regarding pipes, for example to hot water heating and heating the building.

This menu has a docking memory which means that the control system remembers how a particular reversing valve is docked and automatically enters the correct docking the next time you use the same reversing valve.

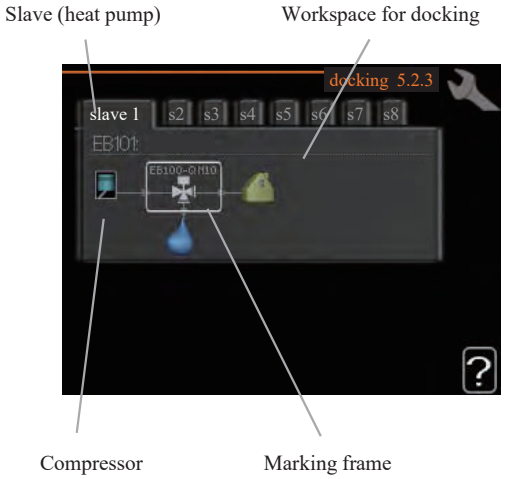

Slave: Here you select for which heat pump the docking setting is to be made.

Compressor: Select if the compressor in the heat pump is blocked (factory setting), or standard (docked for example to pool heating, hot water charging and heating the building).

Marking frame: Move around the marking frame using the control knob. Use the OK button to select what you want to change and to confirm setting in the options box that appears to the right.

Workspace for docking: The system docking is drawn here.

Symbol	Description
	Compressor (blocked)
	Compressor (standard)
	Reversing valves for hot water, cooling. The designations above the reversing valve indicate where it is electrically connected (EB101 = Slave 1, etc.).
	Hot water charging
	Heating (heating the building, includes any extra climate system)
	Cooling

Menu 5.2.4 - accessories

Set which accessories are installed on the installation here.

If the water heater is connected, hot water charging must be activated here.

Menu 5.3 - accessory settings

The operating settings for accessories that are installed and activated are made in the sub-menus for this.

Menu 5.3.2 - shunt controlled add. Heat

prioritised additional heat

Setting range: on/off
Factory setting: off

start diff additional heat

Setting range: 0 – 2000 DM
Default values: 400 DM

minimum running time

Setting range: 0 – 48 h
Default value: 12 h

min temp.

Setting range: 5 – 90 °C
Default value: 55 °C

mixing valve amplifier

Setting range: 0.1 –10.0
Default value: 1.0

mixing valve step delay

Setting range: 10 – 300 s
Default values: 30 s

Set when the addition is to start, the minimum run time and the minimum temperature for external addition with shunt here. External addition with shunt is for example a wood/oil/gas/pellet boiler.

You can set shunt valve amplification and shunt valve waiting time.

Selecting "prioritised additional heat" uses the heat from the external additional heat instead of the heat pump.

The shunt valve is regulated as long as heat is available, otherwise the shunt valve is closed.

See the accessory installation instructions for function description.

Menu 5.3.3 - extra climate system

use in heating mode

Setting range: on/off
Factory setting: on

use in cooling mode

Setting range: on/off
Factory setting: off

mixing valve amplifier

Setting range: 0.1 – 10.0
Default value: 1.0

mixing valve step delay

Setting range: 10 – 300 s
Default values: 30 s

Here you select which climate system (2 - 8) you wish to set. In the next menu you can make settings for the climate system

that you have selected. If this function is activated, you can set "cooling flow temp. at +20°C" and "cooling flow temp. at +40°C" for each climate system where the function is activated.

CAUTION

This setting option only appears if "cooling permitted" is activated in menu 5.11.1.1.

The shunt amplification and shunt waiting time for the different extra climate systems that are installed are also set here.

See the accessory installation instructions for function description.

Menu 5.3.4 - solar heating

Use this menu to set solar heating setttings

start delta-T GP4

Setting range: 1 – 40 °C
Default value: 8 °C

stop delta-T GP4

Setting range: 0 – 40 °C
Default value: 4 °C

max. tank temperature

Setting range: 5 – 110 °C
Default value: 95 °C

max. solar collector temp.

Setting range: 80 – 200 °C
Default value: 125 °C

freeze protection

Setting range: on/off
Factory setting: off

solar panel cooling

Setting range: on/off
Factory setting: off

Menu 5.3.6 - step controlled add. heat

start addition

Setting range: 0 – 2000 DM
Default values: 400 DM

diff. between additional steps

Setting range: 0 – 1000 DM
Default values: 30 DM

max step

Setting range
(binary stepping deactivated): 0 – 3
Setting range
(binary stepping activated): 0 – 7
Default value: 3

binary stepping

Setting range: on/off
Factory setting: off

Make settings for step controlled addition here. Step controlled addition is for example an external electric boiler.

It is possible, for example, to select when the additional heat is to start, to set the maximum number of permitted steps and whether binary stepping is to be used.

When binary stepping is deactivated (off), the settings refer to linear stepping.

See the accessory installation instructions for function description.

Menu 5.3.8 - hot water comfort

activating imm heater

Setting range: on/off
Factory setting: off

activ. imm heat in heat mode

Setting range: on/off
Factory setting: off

activating the mixing valve

Setting range: on/off
Factory setting: off

outgoing hot water

Setting range: 40 – 65 °C
Default value: 55 °C

mixing valve amplifier

Setting range: 0.1 – 10.0
Default value: 1.0

mixing valve step delay

Setting range: 10 – 300 s
Default values: 30 s

Make settings for the hot water comfort here.

See the accessory installation instructions for function description.

activating imm heater: The immersion heater is activated

here if installed in the water heater.

activ. imm heat in heat mode: Activate here whether the immersion heater in the tank (required if the alternative above is activated) will be permitted to charge hot water, if the compressors in the heat pump prioritise heating.

activating the mixing valve: Activate here whether a mixer valve for limiting the temperature of hot water from the water heater is installed.

If this alternative has been activated, you can set the outgoing hot water temperature, shunt amplification and shunt waiting time for the mixer valve.

outgoing hot water: Set the temperature at which the mixing valve is to restrict hot water from the water heater.

See the accessory installation instructions for function description.

Menu 5.3.11 - modbus

word swap

Setting range: on/off
Factory setting: off

Menu 5.3.20 - flow sensor

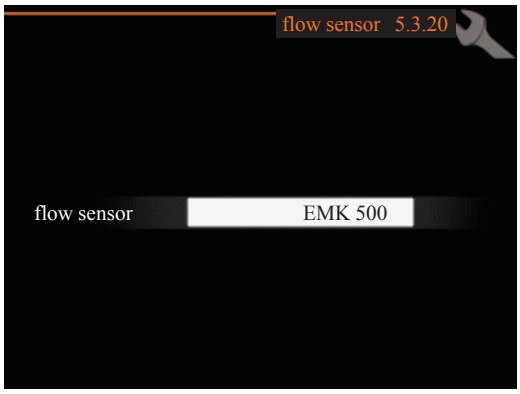

flow sensor

Setting option: EMK 500, EMK 310 / 300, EMK 150
Factory setting: EMK 500

Here you select which flow sensor is used for the energy measurement.

Menu 5.4 – soft in/outputs

You can set the function of in/output for each terminal (AUX1-6 and output).

Position of the terminal depends on the type of controller.

RC-HY20-W: port 11-18 on X2 terminal (AUX1-6), X4 terminal on AA2 board (output)

RC-HY40-W: port 9-14 on terminal X6 and port 1-4 on X2 terminal on AA3 board (AUX1-6), X7 terminal on AA3 board (output)

Menu 5.5 - factory setting service

All settings can be reset (including settings available to the user) to default values here.

NOTE

When resetting, the start guide is displayed the next time the control module is restarted.

Menu 5.6 - forced control

You can force control the different components in the control module and any connected accessories here.

Menu 5.7 - start guide

When the control module is started for the first time the start guide starts automatically. Start it manually here.

See page 42 for more information about the start guide.

Menu 5.8 - quick start

It is possible to start the compressor from here.

CAUTION

There must be a heating or hot water demand to start the compressor.

CAUTION

Do not quick start the compressor too many times over a short period of time as this may damage the compressor and its surrounding equipment.

Menu 5.9 - floor drying function

length of period 1 – 7

Setting range: 0 – 30 days
Factory setting, period 1 – 3, 5 – 7: 2 days
Factory setting, period 4: 3 days

temp. period 1 – 7

Setting range: 15 – 70 °C
Default value:

temp. period 1	20 °C
temp. period 2	30 °C
temp. period 3	40 °C
temp. period 4	45 °C
temp. period 5	40 °C
temp. period 6	30 °C
temp. period 7	20 °C

Set the function for under floor drying here.

You can set up to seven period times with different calculated flow temperatures. If less than seven periods

are to be used, set the remaining period times to 0 days.

Mark the active window to activate the underfloor drying function. A counter at the bottom shows the number of days the function has been active.

TIP

If operating mode "add. heat only" is to be used, select it in menu 4.2.

Menu 5.10 - change log

Read off any previous changes to the control system here.

The date, time and ID no. (unique to certain settings) and the new set value is shown for every change.

NOTE

The change log is saved at restart and remains unchanged after factory setting.

Menu 5.11 - heat pump settings

Settings for installed heat pump can be made in the submenus.

Menu 5.11.1 - EB101 - EB108

Make settings specifically for the installed heat pump and charge pump here.

For RC-HY40-W, it is possible to connect up to 8 heat pumps.

Menu 5.11.1.1 - heat pump

Make settings for the installed heat pump here. To see what settings you can make, see installation manual for the heat pump.

Cooling permited

Here you can set wheter the cooling function is to be activated for the heat pump.

Silent mode permitted

Set whether silent mode is to be activated for the heat pump

Current limit

Set whether the current limiting function is to be activated for the heat pump here.

During active function you can limit the value of the maximum current.

Setting range: 6 - 32 A

Factory setting: 32 A

Stop temperature compressor

Here you can limit the value for the set outdoor temperature down to the value the heat pump is to work

Setting range: –20°C - –2°C

Factory setting: –20°C

blockFreq 1

Select a frequency range within the heat pump may work here

blockFreq 2

Select a frequency range within the heat pump may work here

Menu 5.11.1.2 - charge pump (GP12)

op. mode

Heating/cooling
Setting range: auto / intermittent
Default value: auto

Set the operating mode for the charge pump here.

auto: The charge pump runs according to the current operating mode for RC-HY20/40-W.

intermittent: The charge pump starts and stops 20 seconds before and after the compressor in the heat pump.

speed during operation heating, hot water, cooling

Setting range: auto / manual
Default value: auto

Manual setting

Setting range: 1 – 100 %
Default values: 70 %

speed in wait mode

Setting range: 1 – 100 %
Default values: 30 %

max. allowed speed

Setting range: 80 – 100 %
Default values: 100 %

Set the speed at which the charge pump is to operate in the present operating mode. Select "auto" if the speed of the charge pump is to be regulated automatically (factory setting) for optimal operation.

If "auto" is activated for heating operation, you can also make the setting "max. allowed speed" which restricts the charge pump and does not allow it to run at a higher speed than the set value.

For manual operation of the charge pump deactivate "auto" for the current operating mode and set the value to between 1 and 100 % (the previously set value for "max. allowed speed" no longer applies).

Speed in standby mode (only used if "auto" has been selected for "Operating mode") means the charge pump operates at the set speed during the time when there is neither a need for compressor operation nor additional heat.

5.12 - country

Select here where the product was installed. This allows access to country specific settings in your product.

Language settings can be made regardless of this selection.

NOTE

This option locks after 24 hours, restart of display or program updating.

Service

Service actions

NOTE

Servicing should only be carried out by persons with the necessary expertise.

When replacing components on the system, only genuine replacement parts may be used.

NOTE

If an electrical connection has been disconnected and is connected, ground must be checked using a suitable multimeter.

Maintenance

General inspection

Check the following:

1. Condition of casing.
2. Electrical connections.
3. Alarm log.

Correct any fault before continuing.

Climate system

Check the following:

1. Climate system start and stop temperature.
2. Heating curve settings.
3. Function of the room sensor (if installed).
4. System pressure.
5. Flow and return temperature. The difference must be 5-10 °C.

Correct any fault before continuing.

Emergency mode

NOTE

Switch (SF1) must not be put into mode "|" or ⚠ before the installation is filled with water.

The compressor in the heat pump can be damaged.

Emergency mode is used in event of operational interference and in conjunction with service. Hot water is not produced in emergency mode.

Emergency mode is activated by setting switch (SF1) in mode "⚠". This means that:

- The status lamp illuminates yellow.
- The display is not lit and the control computer is not connected.
- Hot water is not produced.
- The compressors are switched off. Charge pump (EB101-GP12) is running.
- The heating medium pump is active.
- The emergency mode relay (K1) is active.

External additional heat is active if it is connected to the emergency mode relay (K1, terminal block X1).

Ensure that the heating medium circulates through the external additional heat.

Temperature sensor data

Temperature (°C)	Resistance (kOhm)	Voltage (VDC)
-40	351.0	3.256
-35	251.6	3.240
-30	182.5	3.218
-25	133.8	3.189
-20	99.22	3.150
-15	74.32	3.105
-10	56.20	3.047
-5	42.89	2.976
0	33.02	2.889
5	25.61	2.789
10	20.02	2.673
15	15.77	2.541
20	12.51	2.399
25	10.00	2.245
30	8.045	2.083
35	6.514	1.916
40	5.306	1.752
45	4.348	1.587
50	3.583	1.426
55	2.968	1.278
60	2.467	1.136
65	2.068	1.007
70	1.739	0.891
75	1.469	0.785
80	1.246	0.691
85	1.061	0.607
90	0.908	0.533
95	0.779	0.469
100	0.672	0.414

USB service outlet

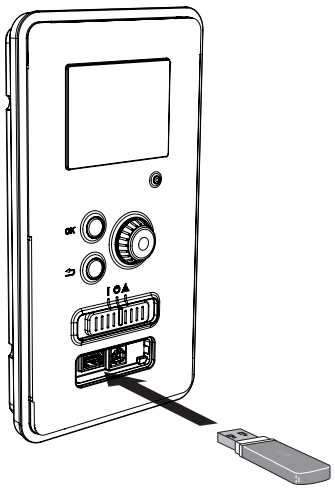

RC-HY20/40-W is equipped with a USB socket in the display unit. This USB socket can be used to connect a USB memory to update the software, save logged information and handle the settings in RC-HY20/40-W.

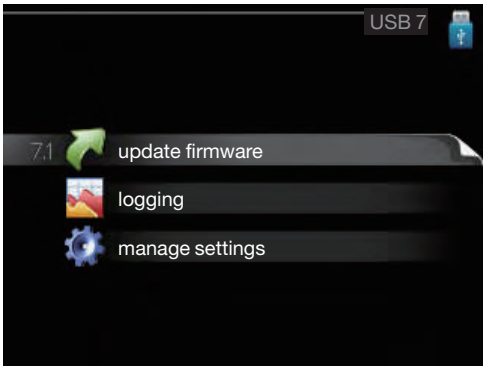

When a USB memory is connected a new menu (menu 7) appears in the display.

Menu 7.1 - update firmware

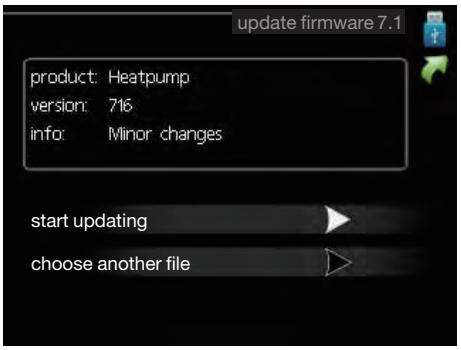

This allows you to update the software in RC-HY20/40-W.

NOTE

For the following functions to work the USB memory must contain files with software for RC-HY20/40-W.

This information states which product the software is intended for, the software version and general information about them. If you wish to select another file than the one selected, the correct file can be selected by "choose another file".

start updating

Select “start updating" if you want to start the update.

You are asked whether you really want to update the software. Respond "yes" to continue or "no" to undo.

If you responded"yes" to the previous question the update starts and you can now follow the progress of the update on the display. When the update is complete RC-HY20/40-W restarts.

NOTE

A software update does not reset the menu settings in RC-HY20/40-W

NOTE

If the update is interrupted before it is complete (for example power cut etc.) the software can be reset to the previous version if the OK button is kept pressing during start up until the green lamp starts to illuminate (takes about 10 seconds).

choose another file

Select “choose another file" if you do not want to use the suggested software. When you scroll through the files, information about the marked software is shown in a fact box just as before. When you have selected a file with the OK button you will return to the previous page (menu 7.1) where you can choose to start the update.

Menu 7.2 - logging

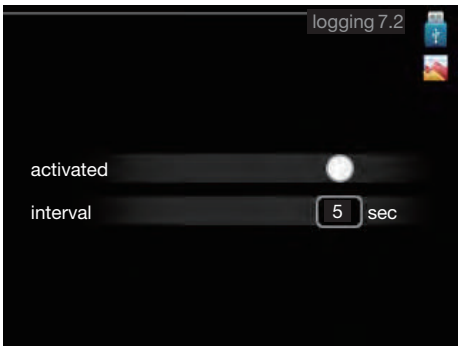

Setting range: 1 s – 60 min
Factory setting range: 5 s

You can set the interval of the log data storage and start saving the log data on the USB memory.

1. Set the desired interval between loggings.
2. Tick “activated".
3. The present values from RC-HY20/40-W are saved in a file in the USB memory at the set interval until “activated" is unticked.

NOTE

Untick "activated" before removing the USB memory.
Menu 7.3 - manage settings

Menu 7.3 - manage settings

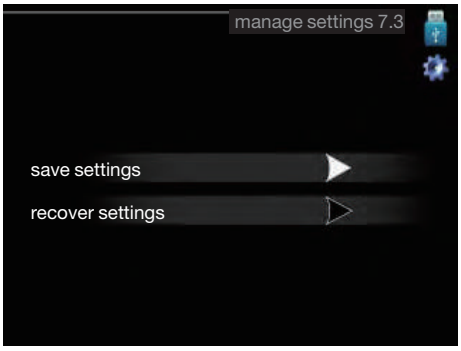

Here you can manage (save as or retrieve from) all the menu settings (user and service menus) in RC-HY20/40-W with a USB memory.

Via "save settings" you save the menu settings to the USB memory in order to restore them later or to copy the settings to another RC-HY20/40-W.

NOTE

When you save the menu settings to the USB memory you replace any previously saved settings on the USB memory.

Via "recover settings" you reset all menu settings from the USB memory.

NOTE

Reset of the menu settings from the USB memory cannot be undone.

Pump down operation – FDCW60VNX-W + HSB60-W

This function can only be started when operation mode is set to addition heat only on menu 4.2. :

When this operating mode is activated pump down is available on service menu 5.11.

Menu number	Setting	Alternatives	Default	Other
5.11.X.1	Pump down	Yes/No	No	Menu only displayed in "Addition heat only" mode
5.11.X.2	Start pump down	Yes/No	No	Activates compressor operation. Above menu has to set "Yes" to display this meny

Once the function has been activated:

- Compressor starts cooling operation with 2 minutes delay time
- Target compressor speed will be 56 rps
- Circulation pump runs at 100% when compressor starts

Pump down stops automatically when one of the following conditions is fulfilled:

- Pressure at BP4 gets lower more than 0.087 Mpa for more than 5 seconds
- More than 5 minutes have passed
- An alarm stops the compressor operation

When pump down is stopped:

- Circulation pump runs at it normal operation
- Pump down changes to "No"
- Start pump down changes to "No"

CAUTION

Make sure to close the service valves according to service manual for recovery of refrigerant unit!

Disturbance in comfort

In most cases, the control module notes a malfunction and indicates this with alarms and shows instructions to rectify it in the display. See "Manage alarm" for in- formation about managing alarms. If the malfunction does not appear in the display, or if the display is not lit, the following troubleshooting guide can be used.

Manage alarm

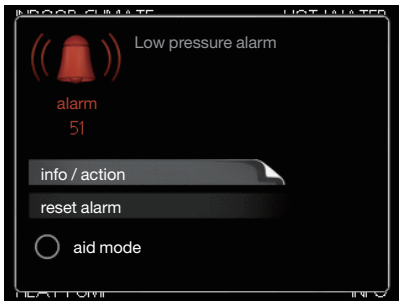

In the event of an alarm, some kind of malfunction has occurred, which is indicated by the status lamp changing from green continuously to red continuously. In addition, an alarm bell appears in the information window.

Alarm

In the event of an alarm with a red status lamp a malfunction has occurred that the heat pump and/or control module cannot remedy itself. In the display, by turning the control knob and pressing the OK button, you can see the type of alarm it is and reset it. You can also choose to set the installation to aid mode.

info / action Here you can read what the alarm means and receive tips on what you can do to correct the problem that caused the alarm.

reset alarm In most cases it is enough to select "reset alarm" to correct the problem that caused the alarm. If a green light illuminates after selecting "reset alarm" the alarm has been remedied. If a red light is still visible and a menu called ”alarm” is visible in the display, the problem that caused the alarm remains. If the alarm disappears and then returns, see the troubleshooting section.

aid mode ”aid mode” is a type of emergency mode. This means that the installation produces heat and/or hot water despite there being some kind of problem. This can mean that the heat pump's compressor is not running. In this case any electrical addition produces heat and/or hot water.

NOTE

To select aid mode an alarm action must be selected in the menu 5.1.4.

CAUTION

Selecting "aid mode” is not the same as correcting the problem that caused the alarm. The status lamp will therefore continue to be red.

Troubleshooting

If the operational interference is not shown in the display the following tips can be used:

Basic actions

Start by checking the following possible fault sources:

- The switch's (SF1) position.
- Group and main fuses of the accommodation.
- The property's earth circuit breaker.
- The control module's miniature circuit breaker (FA1).

Low hot water temperature or a lack of hot water

This part of the fault-tracing chapter only applies if the water heater is installed in the system.

- Closed or choked filling valve for the hot water heater.
  - Open the valve.
- Mixing valve (if there is one installed) set too low.
  - Adjust the mixer valve.
- Control module in incorrect operating mode.
  - If mode "manual" is selected, select "addition".
- Large hot water consumption.
  - Wait until the hot water has heated up. Temporarily increased hot water capacity (temporary lux) can be activated in menu 2.1.
- Too low hot water setting.
  - Enter menu 2.2 and select a higher comfort mode.
- Too low or no operating prioritisation of hot water.
  - Enter menu 4.9.1 and increase the time for when hot water is to be prioritised.

Low room temperature

- Closed thermostats in several rooms.
  - Set the thermostats to max, in as many rooms as possible. Adjust the room temperature via menu 1.1, instead of choking the thermostats.
- Control module in incorrect operating mode.
  - Enter menu 4.2. If mode "auto" is selected, select a higher value on "stop heating" in menu 4.9.2.
  - If mode "manual" is selected, select "heating". If this is not enough, select "addition".
- Too low set value on the automatic heating control.
  - Enter menu 1.1 "temperature" and adjust the offset heating curve up. If the room temperature is only low in cold weather the curve slope in menu 1.9.1 "heating curve" needs adjusting up.
- Too low or no operating prioritisation of heat.
  - Enter menu 4.9.1 and increase the time for when heating is to be prioritised.
- "Holiday mode" activated in menu 4.7.
  - Enter menu 4.7 and select "Off".

- External switch for changing the room heating activ- ated.
  - Check any external switches.
- Air in the climate system.
  - Vent the climate system.
- Closed valves to the climate system.
  - Open the valves.
- Incorrectly adjusted flow across the heat pump.
  - Check whether alarm high condenser in (163) or high condenser out (162) is in the alarm log. Follow the instructions for adjusting charge flow.

High room temperature

- Too high set value on the automatic heating control.
  - Enter menu 1.1 (temperature) and reduce the offset heating curve. If the room temperature is only high in cold weather the curve slope in menu 1.9.1 "heating curve" needs adjusting down.
- External switch for changing the room heating activated.
  - Check any external switches.

Low system pressure

- Not enough water in the climate system.
  - Top up the water in the climate system.

The compressor does not start

- There is no heating requirement.
  - The heat pump does not call on heating nor hot water.
- Temperature conditions tripped.
  - Wait until the temperature condition has been re- set.
- Minimum time between compressor starts has not been reached.
  - Wait 30 minutes and check if the compressor has started.
- Alarm tripped.
  - Follow the display instructions.

Additional heating only

If you are unsuccessful in rectifying the fault and are unable to heat the house, you can, whilst waiting for assistance, continue running the heat pump in ”add. heat only”. This means that additional heating only is used to heat the house.

Set the installation to additional heat mode

1. Go to menu 4.2 op. mode.
2. Mark ”add. heat only” using the control knob and then press OK button.

   Return to the main menus by pressing the Back button.

CAUTION

When commissioning without MTH air/water heat pump an alarm communication error may appear in the display.

The alarm is reset if the relevant heat pump is deactivated in menu 5.2.2 ("installed heat pump").

Alarm list

Alarm nr.	Alarm text on the display	Description	May be due to
157	Low lp cooling	Protection against freezing in water HX during cooling operation	■ Low/no water flow
162	High condenser out temperature	Too high temperature out from the condenser. Self-resetting.	■ Low flow during heating operation ■ Too high set temperatures
163	High condenser in temperature	Too high temperature into the condenser. Self-resetting.	■ Temperature generated by another heat source
183	Defrosting in progress	Not an alarm, but an operating status.	■ Set when the heat pump runs the defrosting procedure
220	High pressure alarm	BP4 has been above 4,15MPa 5 times within 60 minutes.	■ Insufficient air circulation or blocked heat exchanger ■ Expansion valve not correctly connected ■ Service valve closed ■ Defective control board in FDCW ■ Low or no flow during heating operation ■ Defective circulation pump ■ Defective fuse, F(4A)
224	Fan alarm from heat pump	Deviations in the fan speed in FDCW.	■ The fan cannot rotate freely ■ Defective control board in FDCW ■ Defective fan motor ■ Control board in FDCW dirty ■ Fuse (F2) blown
228	Failed defrosting	10 aborted defrost due to alarm: 418,419 or 343	■ Too low water flow ■ Too low return temperatur
230	Hot gas alarm	Temperature deviation on the hot gas sensor (Tho-D) twice within 60 minutes or for 60 minutes continuously.	■ Sensor does not work (see section "Ambient temperature sensor") ■ Insufficient air circulation or heat exchanger ■ Blocked ■ If the fault persists during cooling, there may be an insufficient amount of refrigerant. ■ Defective control board in FDCW
261	High HWX temp	Temperature deviation on the heat exchanger sensor (Tho-R1/R2) five times within 60 minutes or for 60 minutes continuously.	■ Sensor does not work (see section "Disturbances in comfort") ■ Insufficient air circulation or blocked heat exchanger ■ Defective control board in FDCW ■ Too much refrigerant
262	Inv. err.	When IPM (Intelligent power module) displays FO-signal (Fault Output) five times during a 60-minute period.	Can occur when 15V power supply to the inverter PCB is unstable.

Alarm nr.	Alarm text on the display	Description	May be due to
263	Inv. err.	Voltage from the inverter outside the parameters four times within 30 minutes.	■ Incoming power supply interference ■ Service valve closed ■ Insufficient amount of refrigerant ■ Compressor fault ■ Defective circuit board in FDCW
265	Inv. err.	Continuous deviation on power transistor for 15 minutes.	■ Defective fan motor ■ Defective circuit board in FDCW
267	Inv. err.	Failed start for compressor	■ Defective circuit board in FDCW ■ Defective control board in FDCW ■ Compressor fault
268	Inv. err.	Overcurrent, Inverter A/F module	■ Sudden power failure
271	Lw otd tmp	Temperature of BT28 below the value that permits operation	■ Cold weather conditions ■ Sensor fault
272	High otd tmp	Temperature of BT28 above the value that permits operation	■ Warm weather conditions ■ Sensor fault
277	Sensor fault from heat pump	Sensor fault, heat exchanger in FDCW(Tho-R).	■ Open circuit or short circuit on sensor input ■ Sensor does not work (see section "Disturbances in comfort") ■ Defective control board in FDCW
278	Sensor fault from heat pump	Sensor fault, outdoor temperature sensor in FDCW (Tho-A).	■ Open circuit or short circuit on sensor input ■ Sensor does not work (see section "Disturbances in comfort") ■ Defective control board in FDCW
279	Sensor fault from heat pump	Sensor fault, hot gas in FDCW (Tho-D).	■ Open circuit or short circuit on sensor input ■ Sensor does not work (see section "Disturbances in comfort") ■ Defective control board in FDCW
294	Incompatible heat pump	Heat pump and indoor module do not work properly together due to technical parameters.	■ Outdoor module and indoor module are not compatible.
343	Low temp water out	Low water out temperature during cooling or tank defrost operation	■ Too low water flow ■ Too low return temperatur
347	Temp high press	Temporary high pressure alarm	■ No/low water flow ■ Air in water system
403	Sensor fault from PCA 154	Sensor fault, Sensor incoming water in indoor unit (BT3).	■ Open circuit or short circuit on sensor input ■ Sensor does not work (see section "Disturbances in comfort") ■ Defective control board AA23 in indoor unit.

Disturbance in comfort

Alarm nr.	Alarm text on the display	Description	May be due to
404	Sensor fault from PCA 154	Sensor fault, Sensor high pressure heating/ low pressure cooling in indoor unit (BP4).	■ Open circuit or short circuit on sensor input ■ Sensor does not work (see section "Disturbances in comfort") ■ Defective control board AA23 in indoor unit.
412	Sensor fault from PCA 154	Sensor fault, Sensor outgoing water in indoor unit (BT12).	■ Open circuit or short circuit on sensor input ■ Sensor does not work (see section "Disturbances in comfort") ■ Defective control board AA23 in indoor unit.
415	Sensor fault from PCA 154	Sensor fault, Sensor fluid pipe in indoor unit (BT15).	■ Open circuit or short circuit on sensor input ■ Sensor does not work (see section "Disturbances in comfort") ■ Defective control board AA23 in indoor unit.
418	Low temp water out	Anti-freeze protection water heat exchanger during defrost.	■ Too low water flow
419	Freeze prot. exch. defr.	Anti-freeze protection water heat exchanger during defrost.	■ Too low water return temperature

Accessories

Accessory parts

Model name	Designation		RC-HY20-W Connection	RC-HY40-W Connection	Part No.
ECS-40M ECS-41M	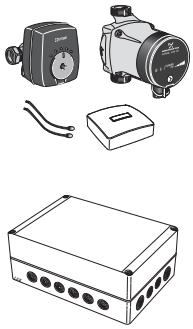	Extra climate system	—	✔	MCD291A008/ MCD291A009
RTS40M	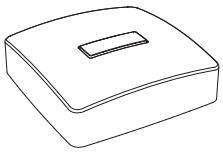	Room sensor	✔	✔ (Included)	MCD291A010
RMU40M	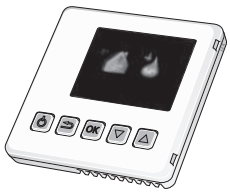	Room unit	—	✔	MCD291A011
AXC30M	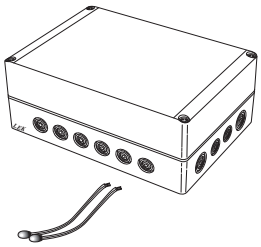	Accessories	—	✔	MCD291A012
EMK300M	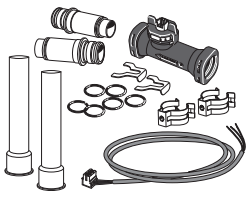	Energy meter kit	—	✔	MCD291A013
EMK500M			—	✔	MCD291A014

Accessories

Model name	Designation		RC-HY20-W Connection	RC-HY40-W Connection	Part No.
ELK9M	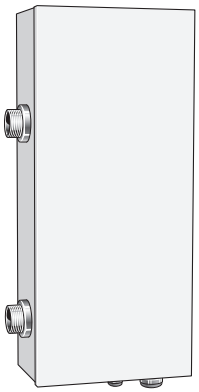	Immersion heater 9kW	✔	✔	MCD291A015
CPD11-25M/65		Charging pump	✔	✔	MCD291A016
CPD11-25M/75			✔	✔	MCD291A017
VST05M	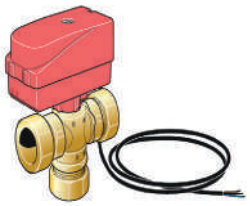	Hot water control	✔	✔	MCD291A018
VST11M			✔	✔	MCD291A019
VST20M	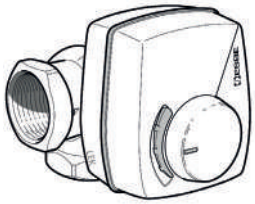		✔	✔	MCD291A020
VCC05M	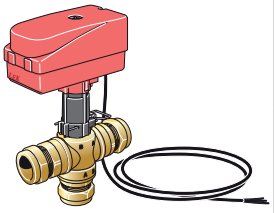	Shuttle valve	✔	✔	MCD291A021
VCC11M			✔	✔	MCD291A022

Model name	Designation		RC-HY20-W Connection	RC-HY40-W Connection	Part No.
POOL40M	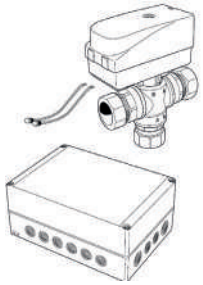	Pool heating	—	✔	MCD291A030
SOLAR42M	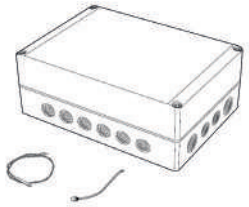	Solar heating	—	✔	MCD291A033
MODBUS40M	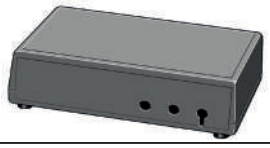	Modbus communication module	—	✔	MCD291A031
EME20M		Solar electricity	✔	✔	MCD291A032

Option parts (For PT tanks)

Model name	Designation		Part No.
ME1030M	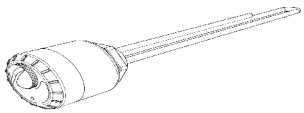	Electrical module	MCD291A029
AnodeT300	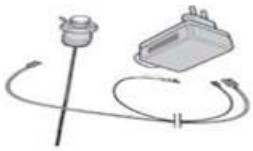	Titanium anode	MCD291A024
AnodeT500			MCD291A025
HR10M		Auxiliary relay	MCD291A028

Electric circuit diagram - HSB60-W

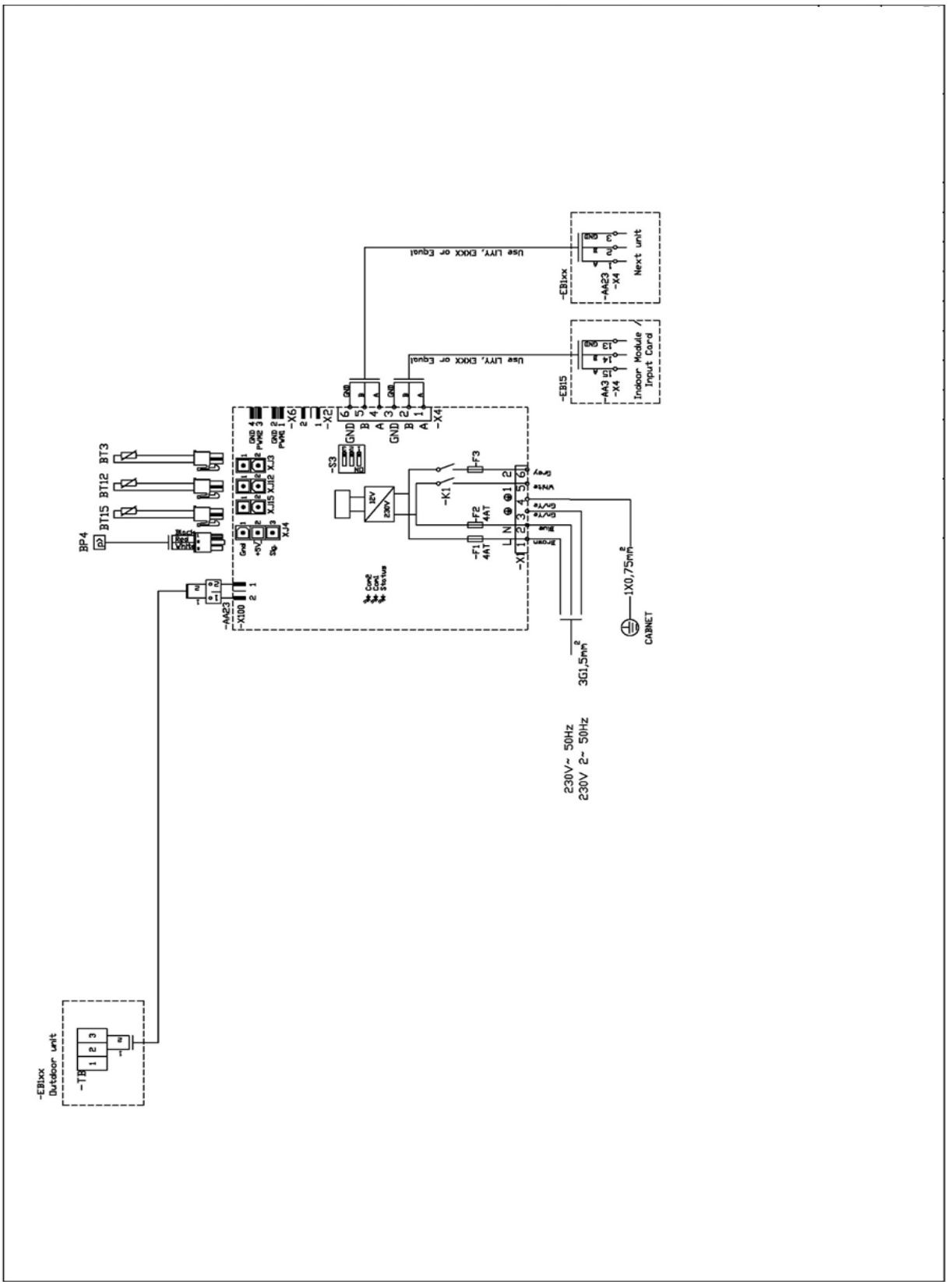

Electric circuit diagram - RC-HY20-W

sheet 1

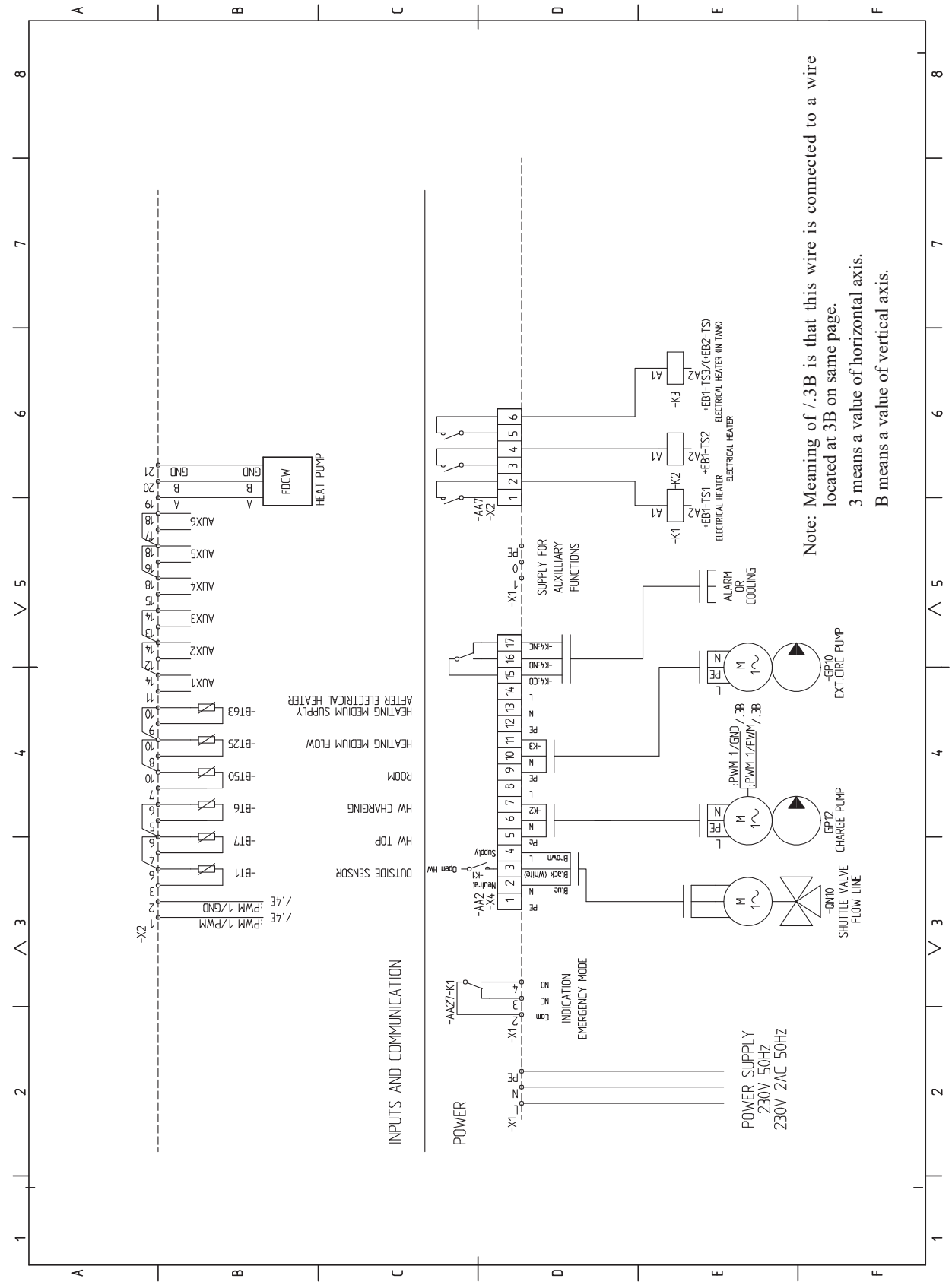

sheet 2

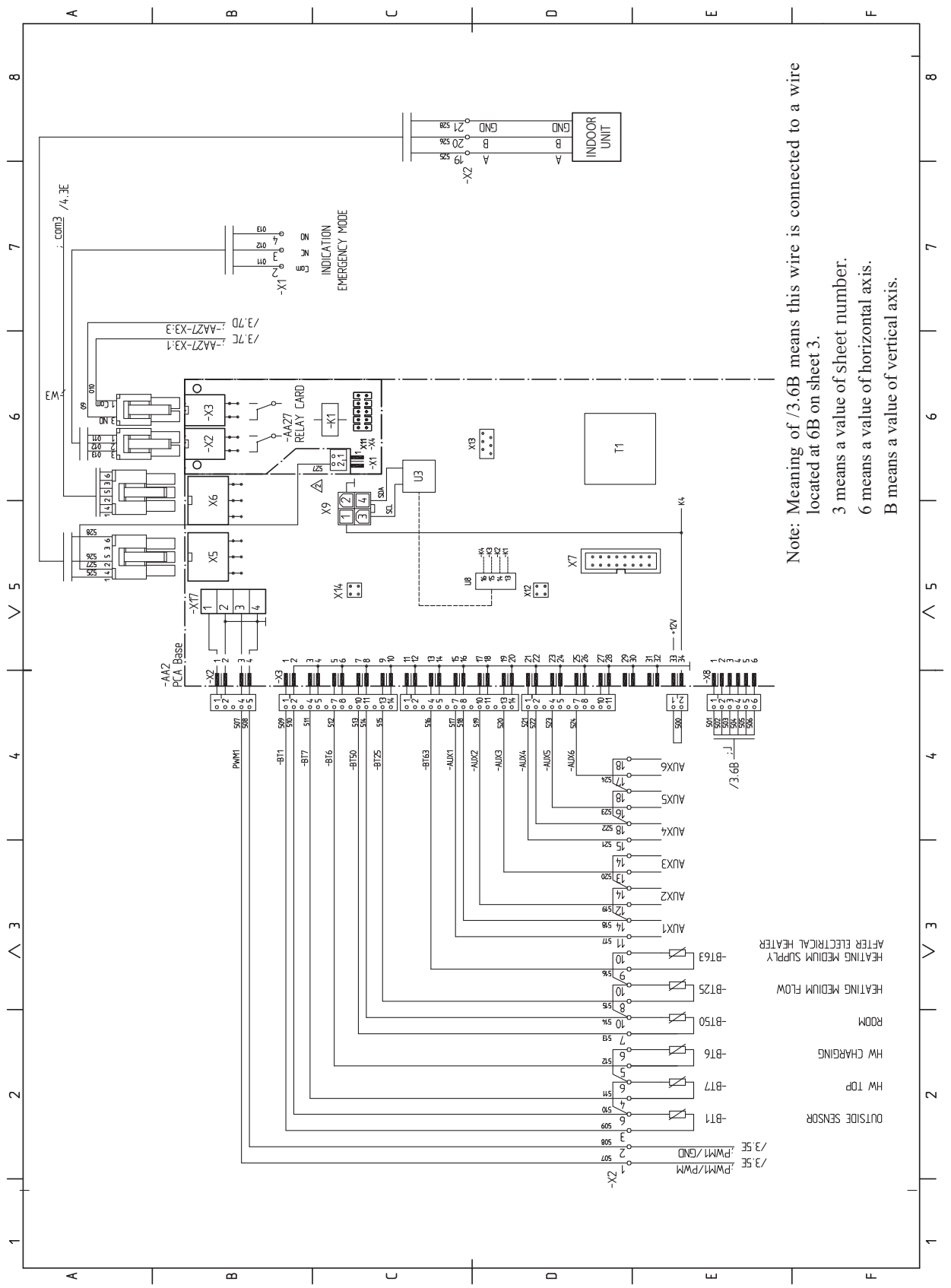
INDOOR UNIT
INDICATION EMERGENCY MODE
-AA27 RELAY CARD
-AA2 PCA Base
OUTSIDE SENSOR
HW TOP
HW CHARGING
ROOM
HEATING MEDIUM FLOW
HEATING MEDIUM SUPPLY AFTER ELECTRICAL HEATER
Note: Meaning of /3.6B means this wire is connected to a wire located at 6B on sheet 3.
3 means a value of sheet number.
6 means a value of horizontal axis.
B means a value of vertical axis.

sheet 3

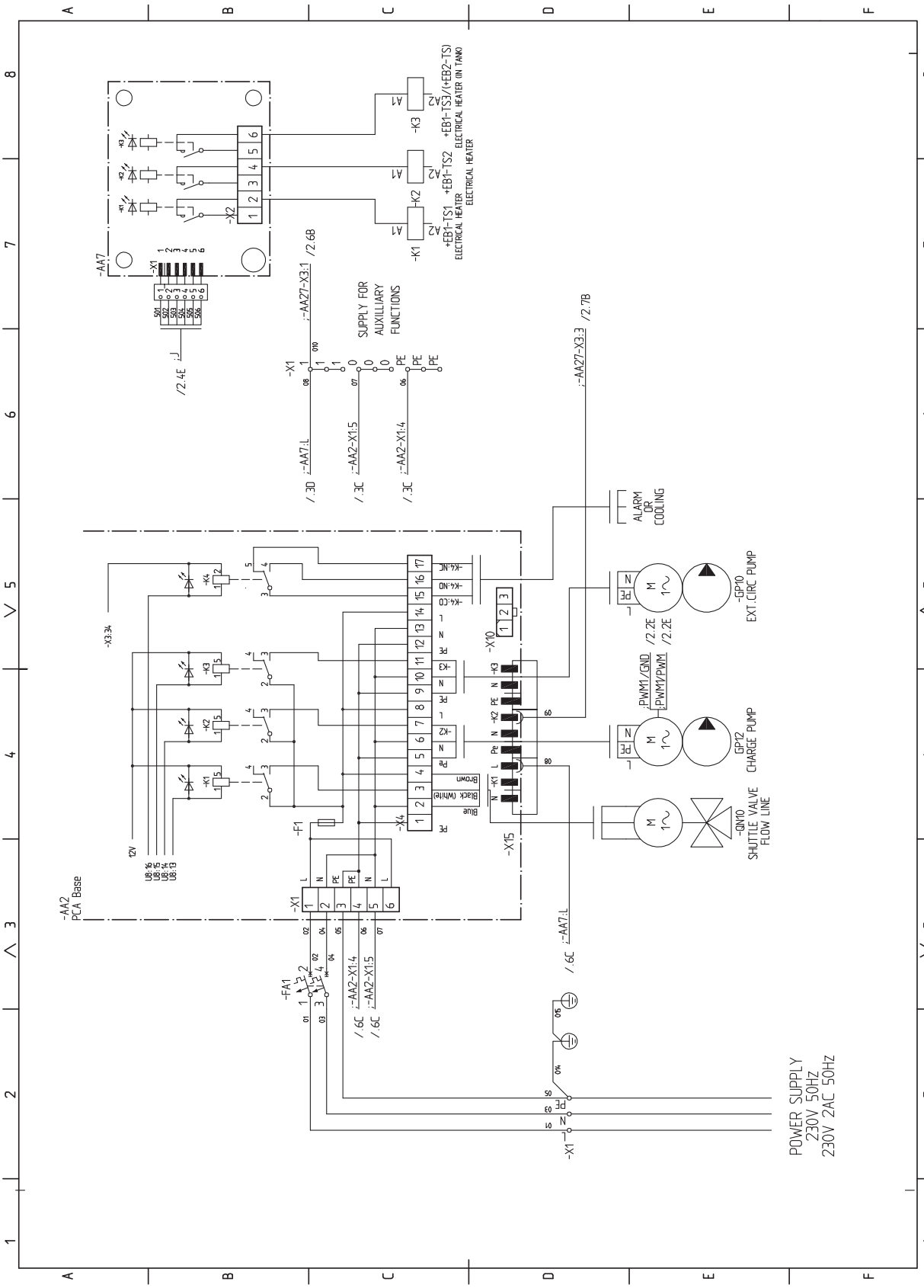
-AA2
PCA Base
-AA7
-X1
-X2
-K1
-K2
-K3
+EB1-TS1
ELECTRICAL HEATER
+EB1-TS2
ELECTRICAL HEATER
+EB1-TS3/(+EB2-TS)
ELECTRICAL HEATER (IN TANK)
/2.4E
/2.6B
-:AA27-X3:1
SUPPLY FOR
AUXILLIARY
FUNCTIONS
-:AA7:L
-:AA2-X1:5
-:AA2-X1:4
/.3D
/.3C
/.3C
-:AA27-X3:3
/2.7B
ALARM
OR
COOLING
-GP10
EXT.CIRC PUMP
-GP12
CHARGE PUMP
-QN10
SHUTTLE VALVE
FLOW LINE
:PWM1/GND
:PWM1/PWM
/2.2E
/2.2E
-X10
-X15
-X4
-X3.34
-F1
-FA1
/.6C
/.6C
/.6C
-:AA7:L
-X1
POWER SUPPLY
230V 50Hz
230V 2AC 50Hz

sheet 4

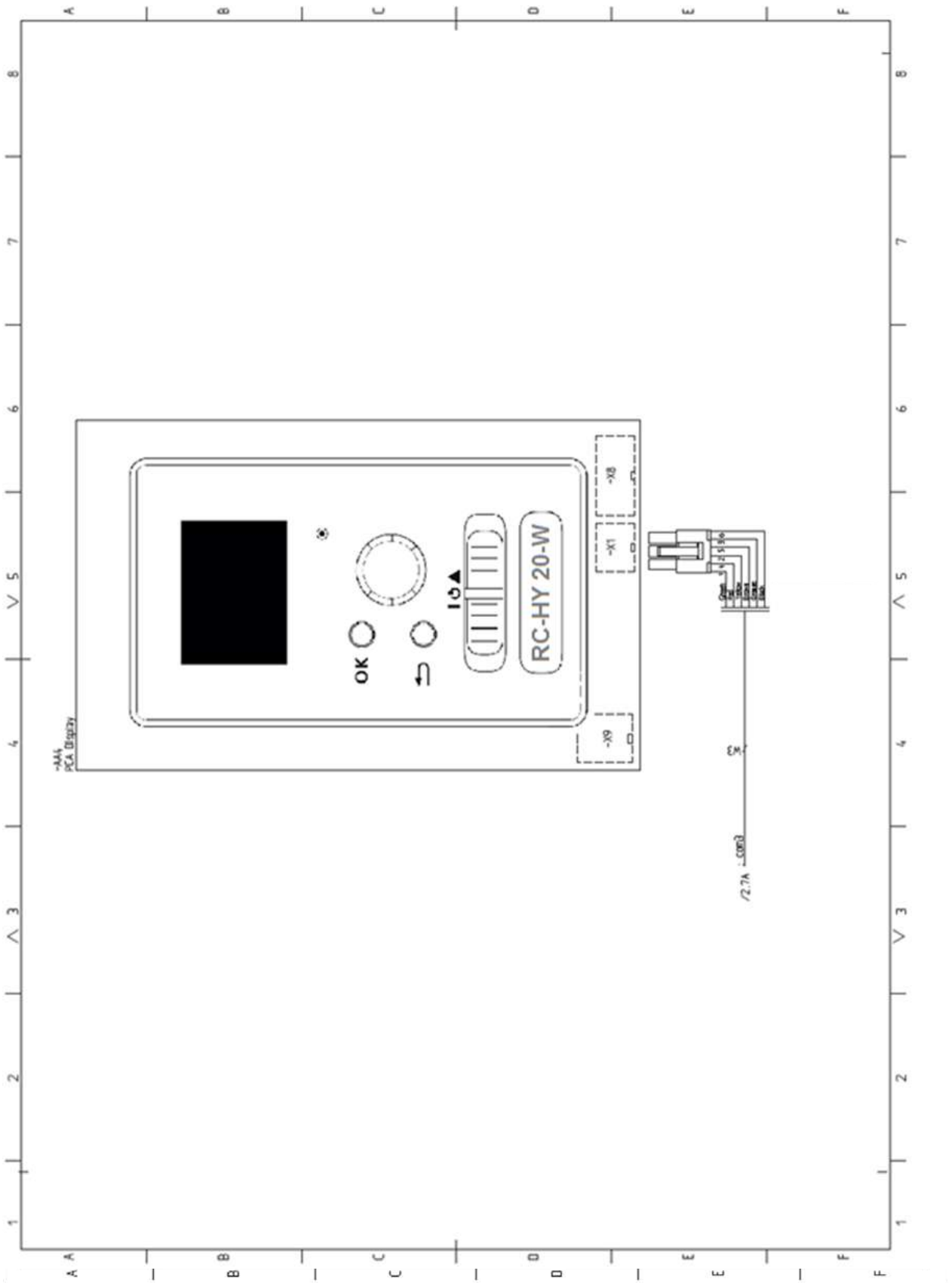

Electric circuit diagram - RC-HY40-W

sheet 1

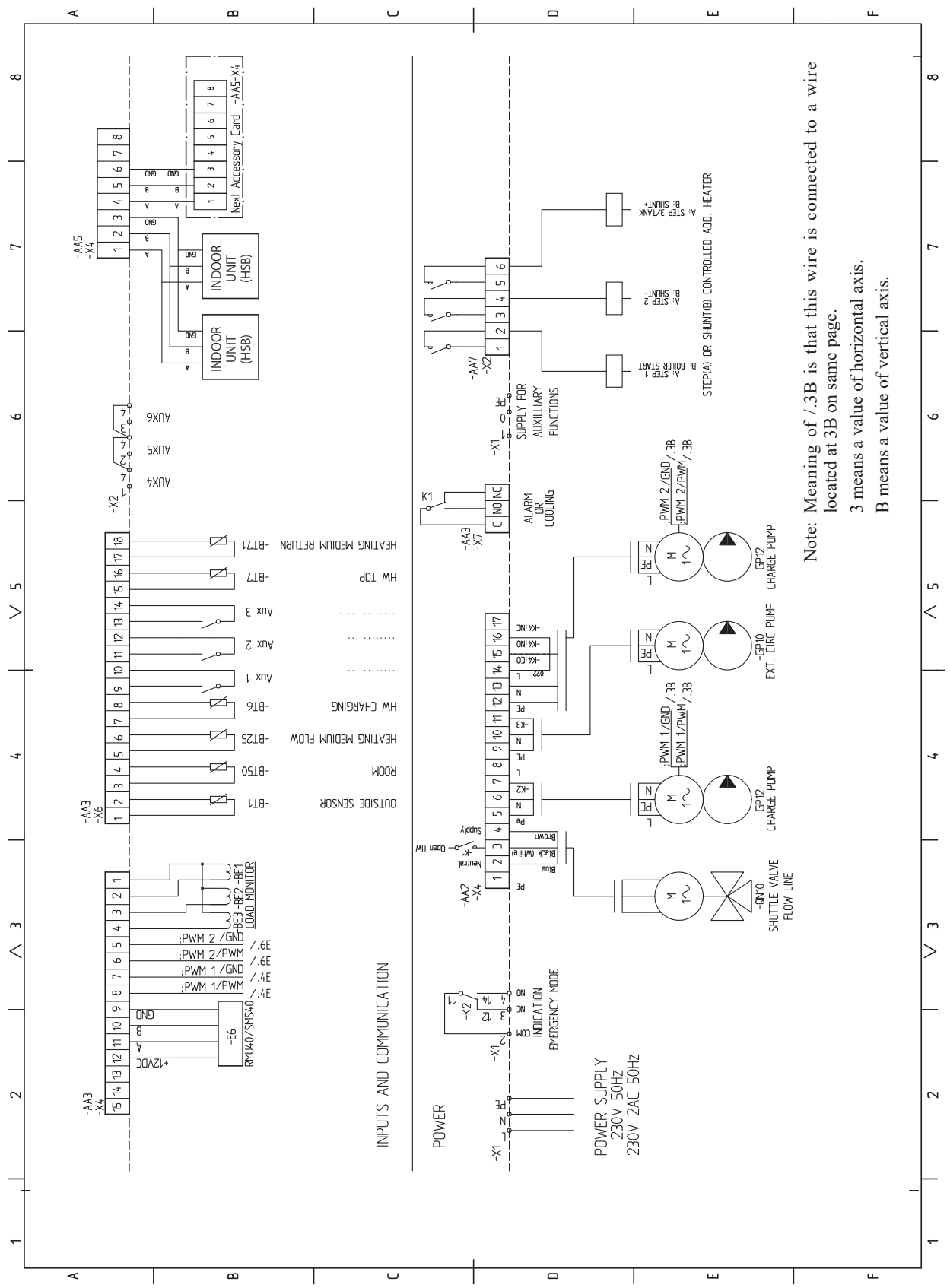

sheet 2

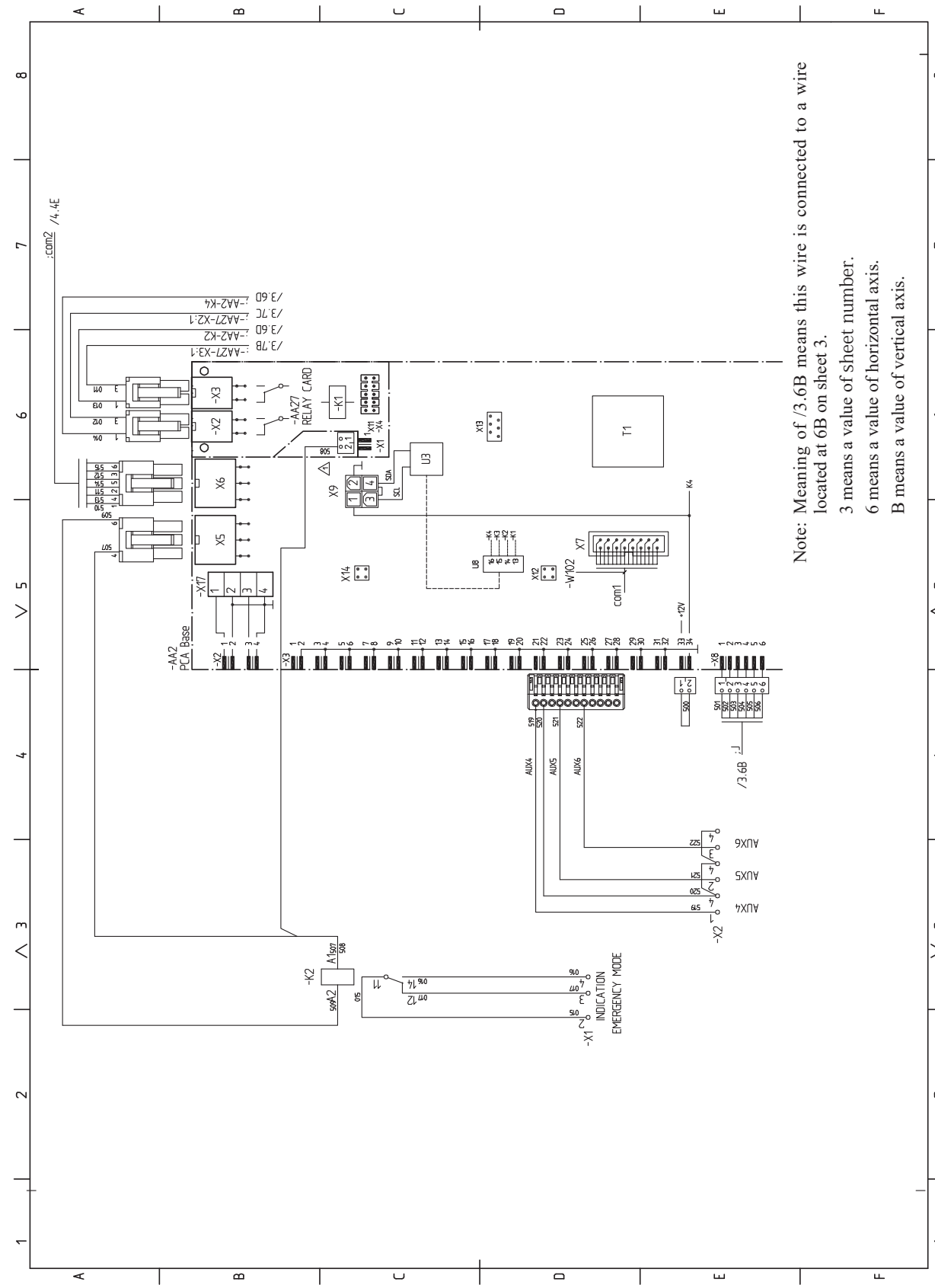
Note: Meaning of /3.6B means this wire is connected to a wire located at 6B on sheet 3.
3 means a value of sheet number.
6 means a value of horizontal axis.
B means a value of vertical axis.
-AA2 PCA Base
-AA27 RELAY CARD
-W102
com1
com2
+12V
AUX4
AUX5
AUX6
INDICATION EMERGENCY MODE
T1
U3
U8

sheet 3

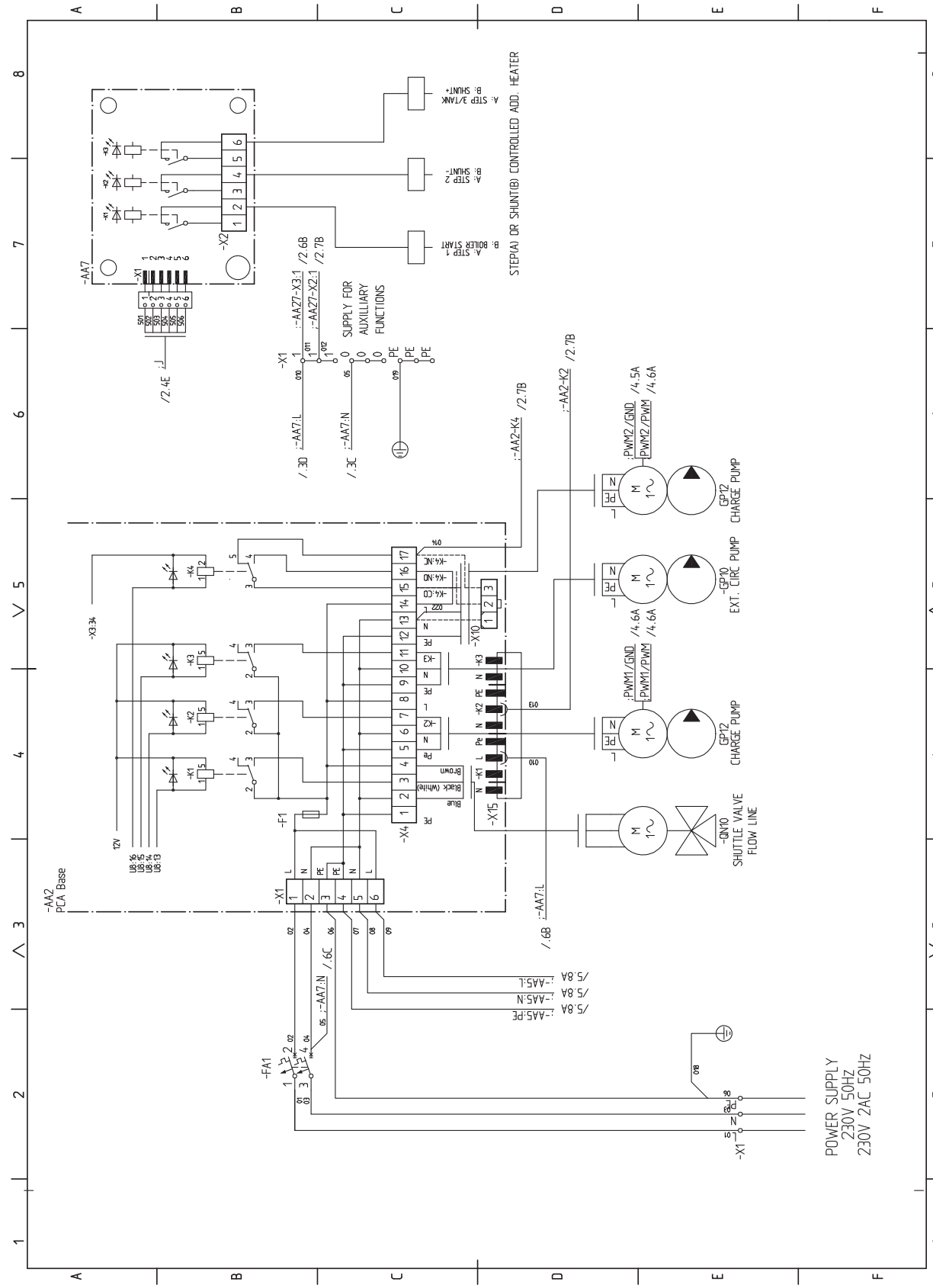
-AA2
PCA Base
-AA7
-X1
-X2
-X3.34
-X4
-X10
-X15
-F1
-FA1
-K1
-K2
-K3
-K4
12V
STEP(A) OR SHUNT(B) CONTROLLED ADD. HEATER
A: STEP 3/TANK
B: SHUNT+
A: STEP 2
B: SHUNT-
A: STEP 1
B: BOILER START
SUPPLY FOR AUXILLIARY FUNCTIONS
-AA27-X3:1
-AA27-X2:1
-AA7:L
-AA7:N
-AA2-K4
-AA2-K2
-PWM2/GND
-PWM2/PWM
-PWM1/GND
-PWM1/PWM
-GP12
CHARGE PUMP
-GP10
EXT. CIRC PUMP
-QN10
SHUTTLE VALVE
FLOW LINE
-AA5:L
-AA5:N
-AA5:PE
POWER SUPPLY
230V 50Hz
230V 2AC 50Hz

sheet 4

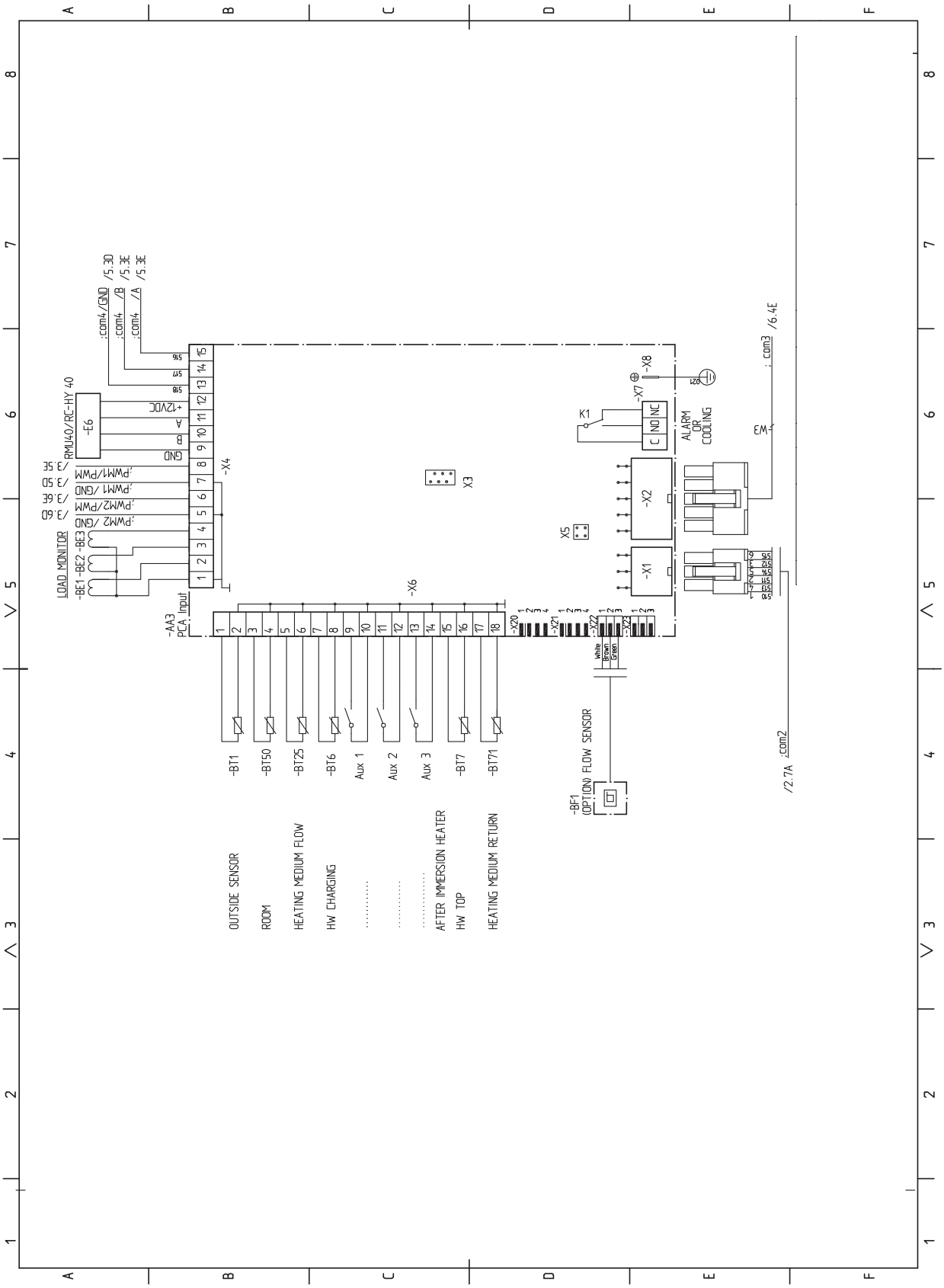
-AA3
PCA, Input
-X4
-X6
-X20
-X21
-X22
-X23
-X1
-X2
-X7
-X8
X3
X5
K1
C NO NC
ALARM
OR
COOLING
-F6
RMU40/RC-HY 40
GND
B
A
+12VDC
LOAD MONITOR
-BE1 -BE2 -BE3
:com4/GND
:com4 /B
:com4 /A
/5.3D
/5.3E
/5.3E
:PWM2 /GND
:PWM2 /PWM
:PWM1 /GND
:PWM1/PWM
/3.6D
/3.6E
/3.5D
/3.5E
-BT1
OUTSIDE SENSOR
-BT50
ROOM
-BT25
HEATING MEDIUM FLOW
-BT6
HW CHARGING
Aux 1
Aux 2
Aux 3
AFTER IMMERSION HEATER
-BT7
HW TOP
-BT71
HEATING MEDIUM RETURN
-BF1
(OPTION) FLOW SENSOR
White
Brown
Green
:com3
/6.4E
:com2
/2.7A

sheet 5

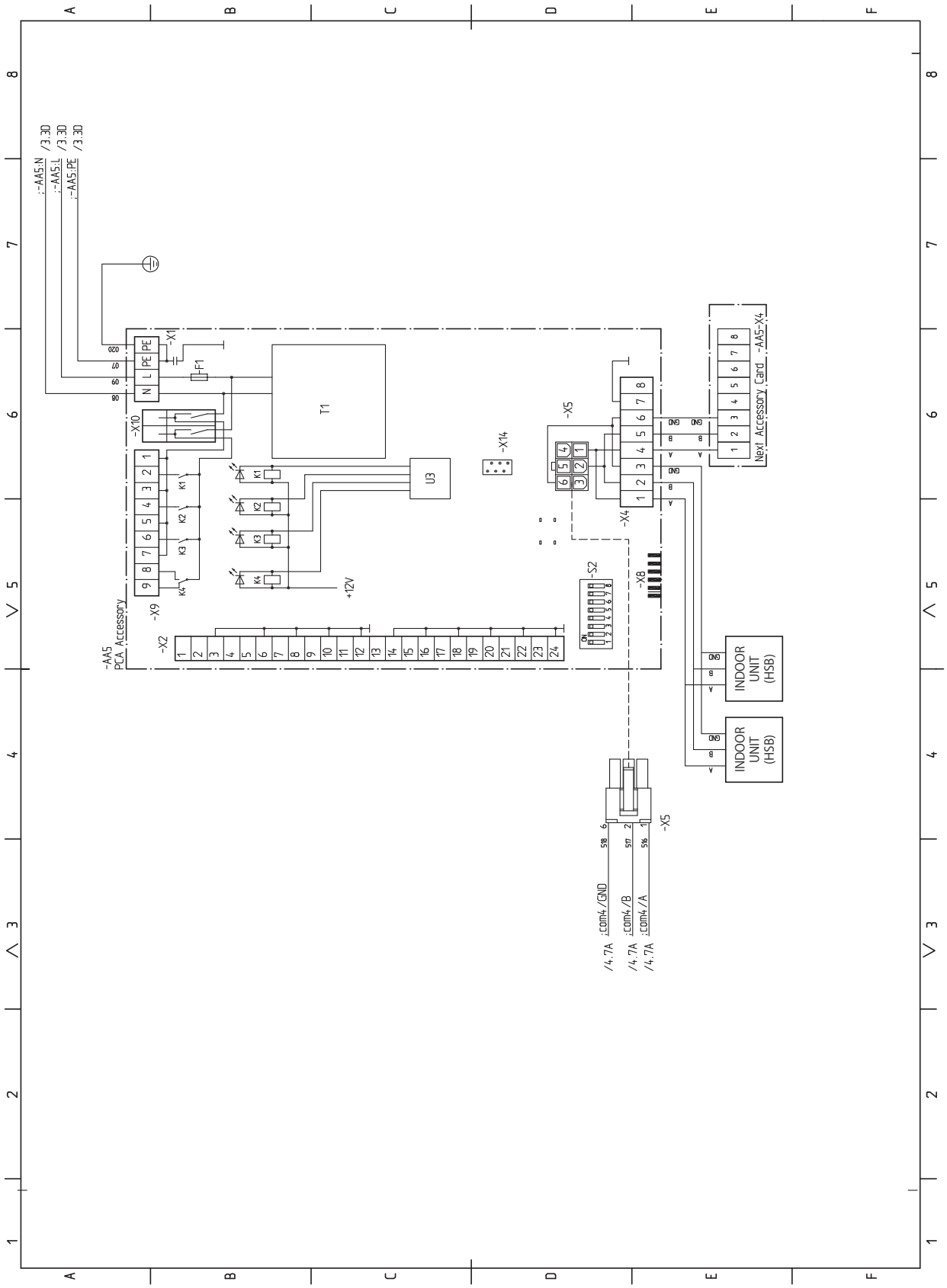
-AA5:N /3.3D
-AA5:L /3.3D
-AA5:PE /3.3D
-X1
PE
L
N
F1
T1
-X10
-X9
-AA5
PCA Accessory
-X2
K1
K2
K3
K4
+12V
U3
-X14
-X5
-X4
-S2
-X8
Next Accessory Card -AA5-X4
INDOOR UNIT (HSB)
INDOOR UNIT (HSB)
-X5
/4.7A -com4/GND
/4.7A -com4/B
/4.7A -com4/A

sheet 6

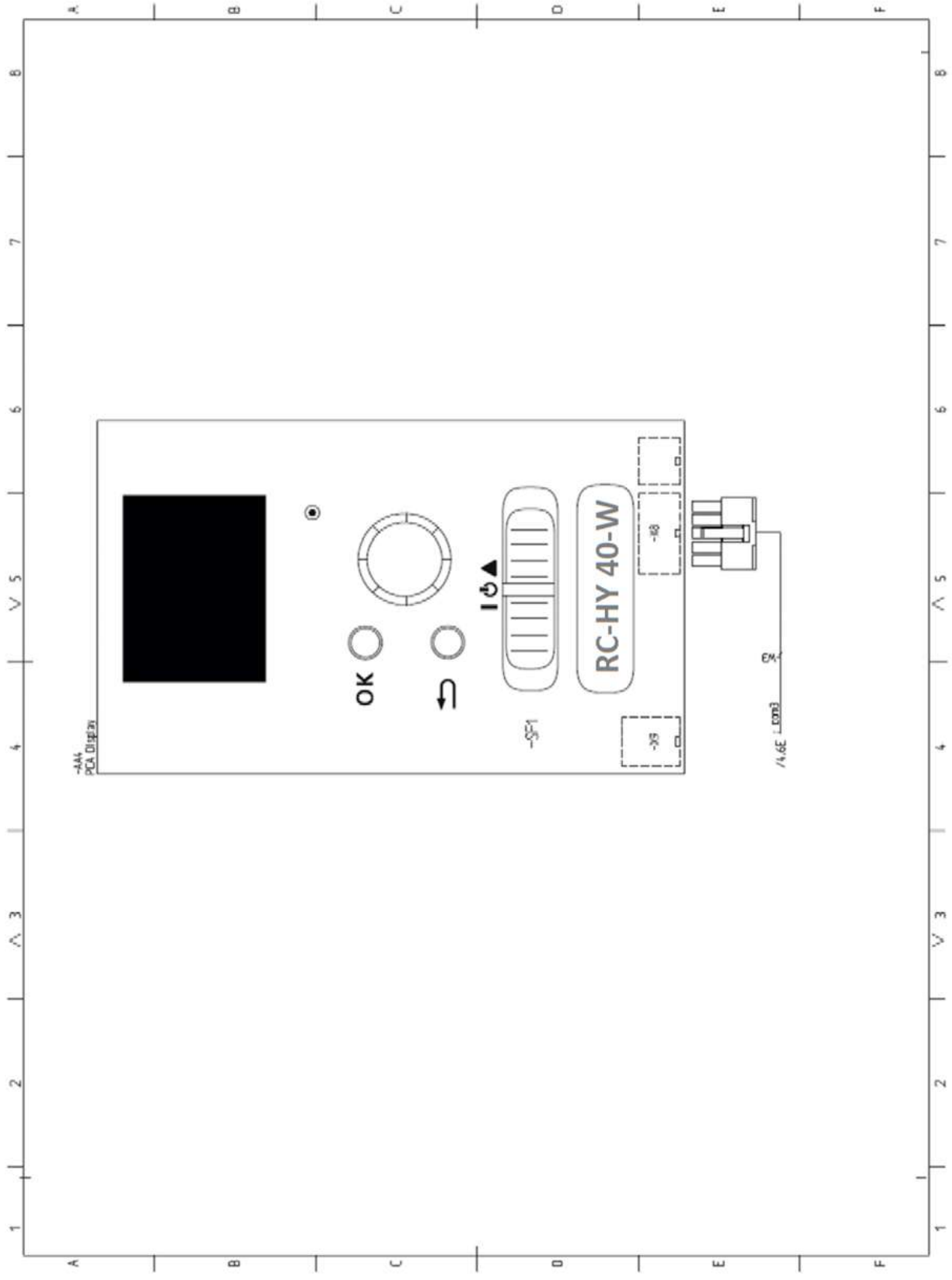

MEMO

MITSUBISHI HEAVY INDUSTRIES

MITSUBISHI HEAVY INDUSTRIES THERMAL SYSTEMS, LTD.

2-3, Marunouchi-chome, Chiyoda-ku, Tokyo, 100-8332, Japan
http://www.mhi-mth.co.jp/

MITSUBISHI HEAVY INDUSTRIES AIR-CONDITIONING EUROPE, LTD.

5 The Square, Stockley Park, Uxbridge, Middlesex, UB11 1ET, United Kingdom
Tel: +44-333-207-4072
Fax: +44-333-207-4089
http://www.mhiae.com

MHIAE SERVICES B.V

(Wholly-owned subsidiary of MITSUBISHI HEAVY INDUSTRIES AIR-CONDITIONING EUROPE, LTD)
Herikerbergweg 238, Luna ArenA, 1101 CM Amsterdam, Netherlands
P.O. Box 23393 1100 DW Amsterdam, Netherlands
Tel: +31-20-406-4535
http://www.mhiaeservices.com